BAKER
Environments For Science™

P. O. Drawer E / 161 Gatehouse Road / Sanford, Maine 04073 / USA
800-992-2537 / 207-324-8773 / Fax: 207-324-3869 / bakerco@bakerco.com / bakerco.com

Operation & Maintenance Manual

IsoGARD®

Class III
Biological Safety Cabinet

MODELS:

Model IG-12, IG-21
Model IG-13, IG-31
Model IG-14, IG-41
Model IG-20, IG-30, IG-40

Revision	Date	Description
J	5/3/16	Updated spare parts information/Branding to match new Product Specification sheet.

This manual includes information for proper operation of this cabinet.
We recommend that it be kept near the cabinet for ready reference.

BAKER
Environments For Science™
P. O. Drawer E / 161 Gatehouse Road / Sanford, Maine 04073 / USA
800-992-2537 / 207-324-8773 / Fax: 207-324-3869 / bakerco@bakerco.com / bakerco.com

TABLE OF CONTENTS

BAKER
Environments For Science™
P. O. Drawer E / 161 Gatehouse Road / Sanford, Maine 04073 / USA
800-992-2537 / 207-324-8773 / Fax: 207-324-3869 / bakerco@bakerco.com / bakerco.com

Environments For Science™

P. O. Drawer E / 161 Gatehouse Road / Sanford, Maine 04073 / USA

800-992-2537 / 207-324-8773 / Fax: 207-324-3869 / bakerco@bakerco.com / bakerco.com

Section I – Function & Description:

1.1 Introduction

Congratulations, you have purchased the finest isolator available for all your containment needs. Your glovebox is uniquely adapted for both biological and potent compound applications. Please read this manual to thoroughly understand the features and operations of your isolator.

Your isolator has been configured to maintain a negative operating pressure that is required for containment applications. To achieve this pressure the IsoGARD is supplied with an integral motor/blower or an exhaust damper to accept the customer's in house exhaust. When exhausted, the customer's blower must provide the necessary static pressure to pull ambient air through the supply filters and out of the exhaust HEPA filters while maintaining the Primary and Pass-thru chambers at a negative preset operating pressure.

The IsoGARD is provided with Baker's unique 'plug & seal' exhaust filters. The tools and plugs that are associated with the 'plug & seal' filter should have been shipped with your unit.. Please refer to this manual for directions on it's proper use. The intake supply HEPA filters provide HEPA filtered air assuring your operations are bathed in Class 10 air (as defined by FED-STD- 209 E). The flow rate can be adjusted as required to prevent upsetting any sensitive equipment or materials that may be used in the glovebox.

The IsoGARD can be certified as a Class III Biological Safety cabinet (in accordance with NIH/NCI Laboratory Safety Monograph Jan, 1979, section III) when the user installs the exhaust of the IsoGARD to a dedicated duct and blower system equipped with a secondary exhaust HEPA filter or an incinerator. Please consult the test report for the serial number of your IsoGARD or contact the factory to be certain that your IsoGARD can be used as a Class III Biological Safety cabinet.

P. O. Drawer E / 161 Gatehouse Road / Sanford, Maine 04073 / USA
800-992-2537 / 207-324-8773 / Fax: 207-324-3869 / bakerco@bakerco.com / bakerco.com

1.2 Description of Standard Features

A. Safety Assurance

The IsoGARD offers the highest level of personnel, environmental and product protection available to users working with biologically and chemically hazardous materials. The glovebox is designed to place a gas tight, leak free physical barrier between the hazardous material and the user. All air that enters and exits the enclosure is HEPA filtered. In addition the interior of the enclosure operates at a negative pressure in relation to the surroundings, in the unlikely event of a leak or break, all air and contamination is drawn away from the user through the exhaust HEPA filters. The glovebox is equipped with both visual and audible alarms to alert the operator of improper operating pressures within the enclosure. Each and every glovebox is tested for HEPA filter and pressure integrity at the factory. A complete factory test report on the performance of your unit has been shipped with the unit.

B. Cleanability & Drainage

The interior walls, floor and ceiling are constructed in continuous uni-body fashion. The easy-to-clean radius corners prevent buildup of contaminates and resist corrosion. All surfaces are polished to a satin finish. Spills or liquid wash down fluids are readily collected at the bottom of the work area where they can be drained via a stainless steel ball valve.

C. Viewscreen, Armports & Gloves

3/8” thick laminated safety glass view screens with stainless steel oval arm ports are provided on each chamber. The combination of a wide viewing area and Baker’s oval armports afford the user the maximum ergonomic comfort and visibility.

The standard IsoGARD is equipped with one-piece neoprene gloves, one in the Pass-thru door and two located in the Primary chamber viewscreen for a standard model IG-12. three for model IG-13, and four for a model IG-14.

D. Tested HEPA Filters

Supply and exhaust HEPA filters in the isolator are 99.999 percent effective on particles 0.3 micron in size by Poly Alpha Olefin (PAO) test. Each filter is factory scan-tested prior to shipping to assure leak-free installation. (refer to section 4.1 for scan test procedure).

P. O. Drawer E / 161 Gatehouse Road / Sanford, Maine 04073 / USA
800-992-2537 / 207-324-8773 / Fax: 207-324-3869 / bakerco@bakerco.com / bakerco.com

E. Manual Control Damper & Seal Plates

The glovebox is provided with a gas tight manual exhaust damper and seal plates that are used to close off the air supply. This will allow the user to perform a pressure decay and/or a mass spectrometer leak test (MSL) to validate the seal integrity of the unit. For normal operations the supply 'pie' dampers (located on the top of the glovebox) must be installed and the exhaust damper open.

F. Alarms and Pressure Indicators

A built in pressure alarm sensor monitors the operating pressure within each chamber. Combined in one module are a low-pressure transducer, a digital display, and an alarm output. The low-pressure alarm set point is displayed by pressing a button on the front panel of the digital readout module. Its setting can be changed by means of a button also accessible from the front panel. (Refer to section 2.1. for operations).

The alarm output of the monitor will signal a flashing red light and an audible buzzer located on the IsoGARD's overhead console in the event of an unsafe operating condition. The operator as acknowledgment of the condition can mute the buzzer.

G. Gas Tight Doors

The glovebox is provided with Baker's rugged gas tight door, which is designed to allow equipment and materials to safely enter and exit. The silicone gasket, knife-edge design and cam action latches provide a gas tight seal after repeated use.

The outer Pass-Thru Chamber door accommodates a single armport and affords a 16.5" wide x 22.4" high door opening. The doors into the Primary/Receiving Chambers provide an opening of 12" wide by 16" tall. (Refer to section 2.9 for door operation & adjustment).

H. Work Area Lighting

The IsoGARD utilizes fluorescent lamps to illuminate the work areas. The lamps are external to the work area and are located inside the stainless steel canopy. (Refer to section 2.1.4 for light operation and change procedure).

I. Leveling Adjustment

P. O. Drawer E / 161 Gatehouse Road / Sanford, Maine 04073 / USA
800-992-2537 / 207-324-8773 / Fax: 207-324-3869 / bakerco@bakerco.com / bakerco.com

A stainless steel tubular support frame is provided with adjustable leg levelers. The levelers affords the user with a means of leveling the work surface to the users floor. The range of each leveler is 3”.

P. O. Drawer E / 161 Gatehouse Road / Sanford, Maine 04073 / USA
800-992-2537 / 207-324-8773 / Fax: 207-324-3869 / bakerco@bakerco.com / bakerco.com

1.3 Description of Optional Features:

A. On Board Motor-Blower: (*if applicable*)

The motor-blower provided as a standard option shall be the EBM centrifugal single-inlet blower. The 120V, 3 amp PSC (Permanent Split Capacitor) motor is integral to the cast aluminum scroll. The blower is bolted to the rear access cover of the exhaust filter housing and is directly behind the 4" exhaust damper. This arrangement allows the butterfly damper to act as a motor speed control by varying the load to the blower. Likewise no electronic speed control is necessary. Because the blower is located within a negative pressure chamber all wire penetrations are made via a sealed bulkhead connector on the rear access cover.

A single low voltage push button, located on the control console, will activate the on board motor-blower. Your IsoGARD may be provided with a 230V, 50 or 60Hz. Motor, when supplied with optional power packages.

B. Hinged Front View screen: (*if applicable*)

The hinged viewscreen is provided to allow full access to the primary chamber after proper decontamination and clean-up. The hinged viewscreen (also referred to as 'gull-wing') is assisted by gas struts so as to lift up and off the sealing surface of the IsoGARD.
The hinged viewscreen is secured via five latches with adjustable keepers. Use the latches to relieve the gasket compression force and the handles to open the viewscreen (the gas shocks will assist in the operation of the viewscreen). As a safety feature a position switch located inside the door will defeat the UV light switch when the door is opened (when supplied with the UV light option only). Your viewscreen may be supplied with keyed-locking latches.

Operators must use extreme caution in the use of the hinged viewscreen; care must be taken to avoid damaging gloves, sealing surfaces or causing operator injury due to misuse.

C. UV Germicidal Light: (*if applicable*)

The UV germicidal light can be turned on by depressing the single push button on the overhead console. The button will illuminate when switched on and the light will energize. As a safety feature the UV light is interlocked with the hinged viewscreen. Consequently the UV light is only operable when the viewscreen is closed to provide eye protection to users (the glass viewscreen filters out the harmful effects of the UV light when closed).

P. O. Drawer E / 161 Gatehouse Road / Sanford, Maine 04073 / USA
800-992-2537 / 207-324-8773 / Fax: 207-324-3869 / bakerco@bakerco.com / bakerco.com

D. 15 gallon Dunk Tank & low liquid level sensor: (*if applicable*)

The dunk tank provided with the IsoGARD is intended for small items, that are possibly biologically contaminated, to be passed out of the IsoGARD without breaching containment. The dunk tank, when filled with approximately 15 gallons of a disinfecting solution, will create an air tight seal across the throat. Knowing that the throat of the dunk tank is 9" x 8", the user should consider the size and number of items that will be placed in the dunk tank.

The dunk tank has a hinged cover with a gasket and latch, it is not intended to create a gas tight seal. Consequently the dunk tank ***must*** be filled with liquid at all times.

The dunk tank is constructed from type 316L stainless steel, the user should consider the chemical compatibility of the disinfecting solution with that of the stainless steel. Coated surfaces are provided upon request only.

Some unique features of the IsoGARD dunk tank include the following:

- Low liquid level sensor. An infrared sensor located on the dunk tank signals a warning light and audible alarm when there is low liquid level inside the dunk tank. This alarm will activate well before a containment breach occurs.
- Drain valve. A stainless steel ball valve is provided for the drainage of the dunk tank. The ball valve is provided with a ½" NPT female thread should it be necessary to make a connection.
- Locking latch. The hinged cover provided on the external side of the dunk tank is provided with a key-lock style latch allowing the users to deny access to the dunk tank.
- Hold down screen. A perforated screen resides just under the external lid. The purpose of the screen is to keep items submerged in the disinfecting solution until they can be retrieved by the operator. The hold down can hinge or removed.

P. O. Drawer E / 161 Gatehouse Road / Sanford, Maine 04073 / USA
800-992-2537 / 207-324-8773 / Fax: 207-324-3869 / bakerco@bakerco.com / bakerco.com

1.4 Electrical Specifications *(120V Standard electrical service)*

Your IsoGARD operates on a 120 VAC, 20A, 60 Hz, Single phase circuit. This supplies power to the blower motor, fluorescent lights, pressure monitors, alarm circuitry and receptacles. The unit is equipped with a 20 foot power cord with a 120V, 20A NEMA 5-20P plug. All electrical controls are housed in the unit's control console box.

The unit has two work area duplex receptacles located on the interior rear wall. These are GFCI receptacles rated for 120V, 15A and are independently controlled by separate 5 amp switch/ circuit breakers on the control console.

Your IsoGARD utilizes a small PLC, located inside the console, to control the low pressure alarms. the PLC, which requires no user interface, has been programmed by the Baker Company for the proper alarm delay, mute and acknowledge features. The PLC also allows the user to take the alarm output to a central alarm. Connection can be made by utilizing a two conductor 20 AWG cord to Y4 and COM on the PLC. This provides a dry contact circuit and has a rated control capacity of 250V AC, 2A; 30V DC, 2A.

Warning: Several devices located inside the canopy are high voltage. There are no user controls located inside the canopy. Maintainence performed inside the canopy shall be done by an authorized electrician only.

1.5 Electrical Specifications *(220V Optional electrical service)*

Your IsoGARD operates on 220 VAC, 16A, 50 Hz, Single phase circuit. This supplies power to the blower motor, fluorescent lights, pressure monitors, alarm circuitry and receptacles. A junction box is provided on the back of the unit for power connection. All electrical controls are housed in the unit's control console box.

The unit has two work area receptacles located on the interior rear wall. These receptacles are rated for 250V AC at 13A and are independently controlled by separate 5 amp switch/ circuit breakers on the control console.

Your IsoGARD utilizes a small PLC, located inside the console, to control the low pressure alarms. the PLC, which requires no user interface, has been programmed by the Baker Company for the proper alarm delay, mute and acknowledge features. The PLC also allows the user to take the alarm output to a central alarm. Connection can be made by utilizing a two conductor 20 AWG cord to Y4 and COM on the PLC. This provides a dry contact circuit and has a rated control capacity of 250V AC, 2A; 30V DC, 2A.

BAKER
Environments For Science™
P. O. Drawer E / 161 Gatehouse Road / Sanford, Maine 04073 / USA
800-992-2537 / 207-324-8773 / Fax: 207-324-3869 / bakerco@bakerco.com / bakerco.com

Section II Maintenance & Operations:

2.1 The Electrical Console

All the monitors, alarm lights, and switches are located on the overhead console where they are visible, clearly labeled and easily reached. A description of the monitors, alarms light and switches are as follows from left to right: *Leftside Outlet switch, Rightside Outlet switch, Blower switch, Fluorescent Light switch, Alarm Buzzer Mute, Auxiliary Switch, Audible Buzzer, Pass-thru Pressure Monitor (Top), Primary Pressure Monitor (Bottom).*

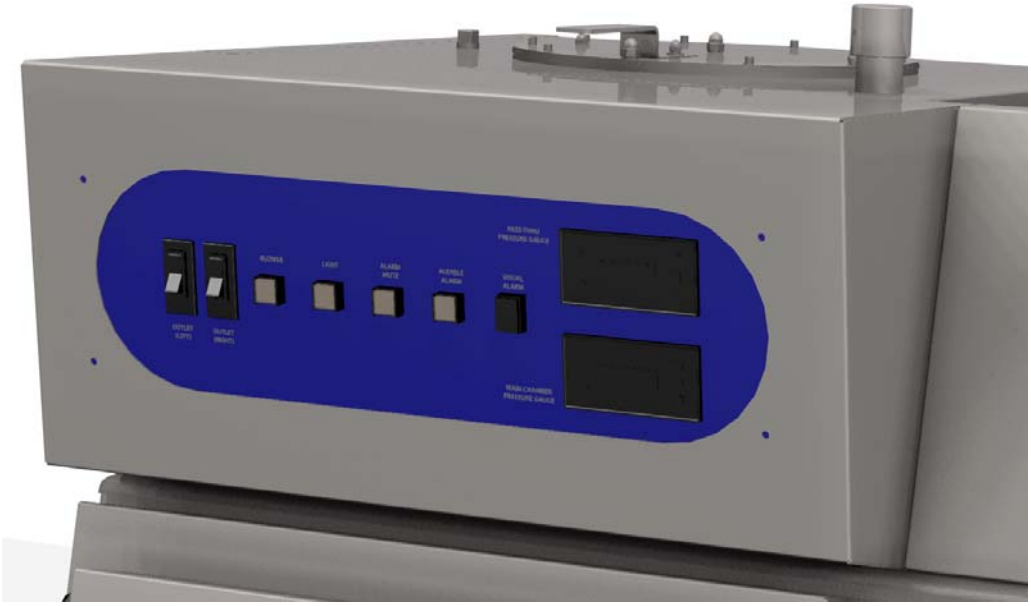

Console shown 110v electrical service only. 220v console may vary

2.1.1. Pressure Monitor & Alarm Setpoint

The unit's pressure monitors, which are located in the overhead console, indicate the negative operating pressure inside the Primary and pass-thru Chambers in inches of water gage with respect to the room. A pressure monitor is associated with the pass-thru box only when the pass-thru is provided with HEPA filtered supply and exhaust.

To set the Hi/Lo alarm set points refer to the (Programming the Alarm Set Points) section in the Modus Installation and Operational Handbook supplied with this document. Parameters are stored in a nonvolatile memory. In the event of a power failure the monitors will run a self test and return to normal functions upon powering up. The alarms will not function during loss of power condition.

The alarm set point represents the midpoint of the pressure monitor's deadband. Nuisance tripping is eliminated when the alarm set point is established so it is at least ½ the dead band from the operating point. When the pressure monitor goes into alarm, it will turn on a flashing red light beside the pressure monitor and an audible buzzer located on the control panel. The operator can mute or acknowledge the alarm via the 'mute' function.

Note that the alarms are deactivated (i.e. no audible alarm will sound) when the blower is off. However the pressure monitor will continue to display the pressure and alarm status (red light).

2.1.2 The MUTE Function.

The mute switch has been programmed to operate in the following three modes:

1.) **Latched alarm with acknowledgement:** If either the main chamber or pass-thru monitor alarms are activated by a momentary fault the alarm indicators alert the user and the mute switch flashes even though the monitors have returned to a normal state. This is to alert the user that there is a potential problem that could lead to an unsafe work area. This is referred to as a 'latched' alarm. Pressing the mute switch acknowledges the alarms and resets them.
2.) **Latched alarm with Mute:** If either the main chamber or pass-thru monitors maintain a steady alarm status displayed by the red indicators on the monitors, pressing the mute switch will silence the audible alarm for five minutes while the visual indicators continue flashing. The mute switch will stay illuminated continuously during this cycle. If the monitors come out of alarm during the mute cycle, the alarms are cancelled. This feature is provided to allow for set-up or routine maintainance of the IsoGARD and should only be used when there is no risk of contamination to the user.

2.1.2a The MUTE Function for units *without* on board motor-blowers.

The mute switch has been programmed to operate in the following three modes:

3.) **Latched alarm with acknowledgement:** If either the main chamber or pass-thru monitor alarms are activated by a momentary fault the alarm indicators alert the user and the mute switch flashes even though the monitors have returned to a normal state. This is

to alert the user that there is a potential problem that could lead to an unsafe work area. This is referred to as a 'latched' alarm. Pressing the mute switch acknowledges the alarms and resets them.

4.) **Latched alarm with Mute:** If either the main chamber or pass-thru monitors maintain a steady alarm status displayed by the red indicators on the monitors, pressing the mute switch will silence the audible alarm for five minutes while the visual indicators continue flashing. The mute switch will stay illuminated continuously during this cycle. If the monitors come out of alarm during the mute cycle, the alarms are cancelled. This feature is provided to allow for set-up or routine maintainance of the IsoGARD and should only be used when there is no risk of contamination to the user.

5.) **Alarm disabled for shutdown mode:** If the isolator is to be shut down for extended periods, the audible and visual alarm indicators can be disabled by pressing and holding the mute switch for five seconds after both monitors go into alarm. To do this it may be required to partially close either the exhaust or supply air dampers. The extended shut down cycle is distinguished by a slow flashing mute switch. When the isolator is returned to normal operating condition the extended shut down cycle is cancelled.

2.1.3 Outlet Breaker Switches

The breaker switches are provided to control the unit's electrical duplex outlets. The rocker on the switches will illuminate when the outlets are energized. These switches can also be useful in the remote switching of devices plugged into the outlets.

2.1.4 Fluorescent Light Operation & Replacement

2.1.4.1 Fluorescent Light Operation:

Depressing the single push button labeled 'lights' located on the overhead console will turn on the fluorescent lights. The button will illuminate to show power and the lamps should light up when energized. The fluorescent lights can be energized independent of the motor status (Don't assume the motor is running because the light is on).

2.1.4.2 Fluorescent Light Replacement procedure:

Illumination of the primary and pass-thru chambers is achieved via biaxial fluorescent Lamps mounted above the respective view screens. The number of lamps supplied with your unit will vary with the model designation. All lamps are external to the negative pressure chambers so as to serviced insitu.

P. O. Drawer E / 161 Gatehouse Road / Sanford, Maine 04073 / USA
800-992-2537 / 207-324-8773 / Fax: 207-324-3869 / bakerco@bakerco.com / bakerco.com

Procedure for lamp replacement:

1. The fluorescent lamps will be hot to the touch. Use the console switch to turn off the fluorescent lights and allow at lease five minutes for sufficient cool down.
2. Find the two quarter turn fasteners on each side of the canopy cover.
3. Pull it the fasteners out and turn ¼ to lock
4. Pull the stainless steel cover towards you and away from the unit.
5. Notice how the biaxial lamp is secured on two ends; a socket makes an electrical connection and a simple clamp supports the end. Pull the end of the lamp off the clamp then pull the lamp out of the socket.
6. Install the new lamp by pushing the socket in and then pushing the end down into the clamp. Re-install the canopy cover and secure using the ¼ turn fasteners.

2.2.1 Replacing the Exhaust Filters (Standard Option)

The 'Plug-and-Seal' HEPA filter offers the user a means of replacing the exhaust filter without compromising protection. You should have the following components before attempting to remove a contaminated filter:

- New replacement canister HEPA filter
- Disposable 3-1/2" filter plug (36470)
- Removal/Installation Tool
- Wipes and disinfecting agent
- Teflon tape

BAKER
Environments For Science™
P. O. Drawer E / 161 Gatehouse Road / Sanford, Maine 04073 / USA
800-992-2537 / 207-324-8773 / Fax: 207-324-3869 / bakerco@bakerco.com / bakerco.com

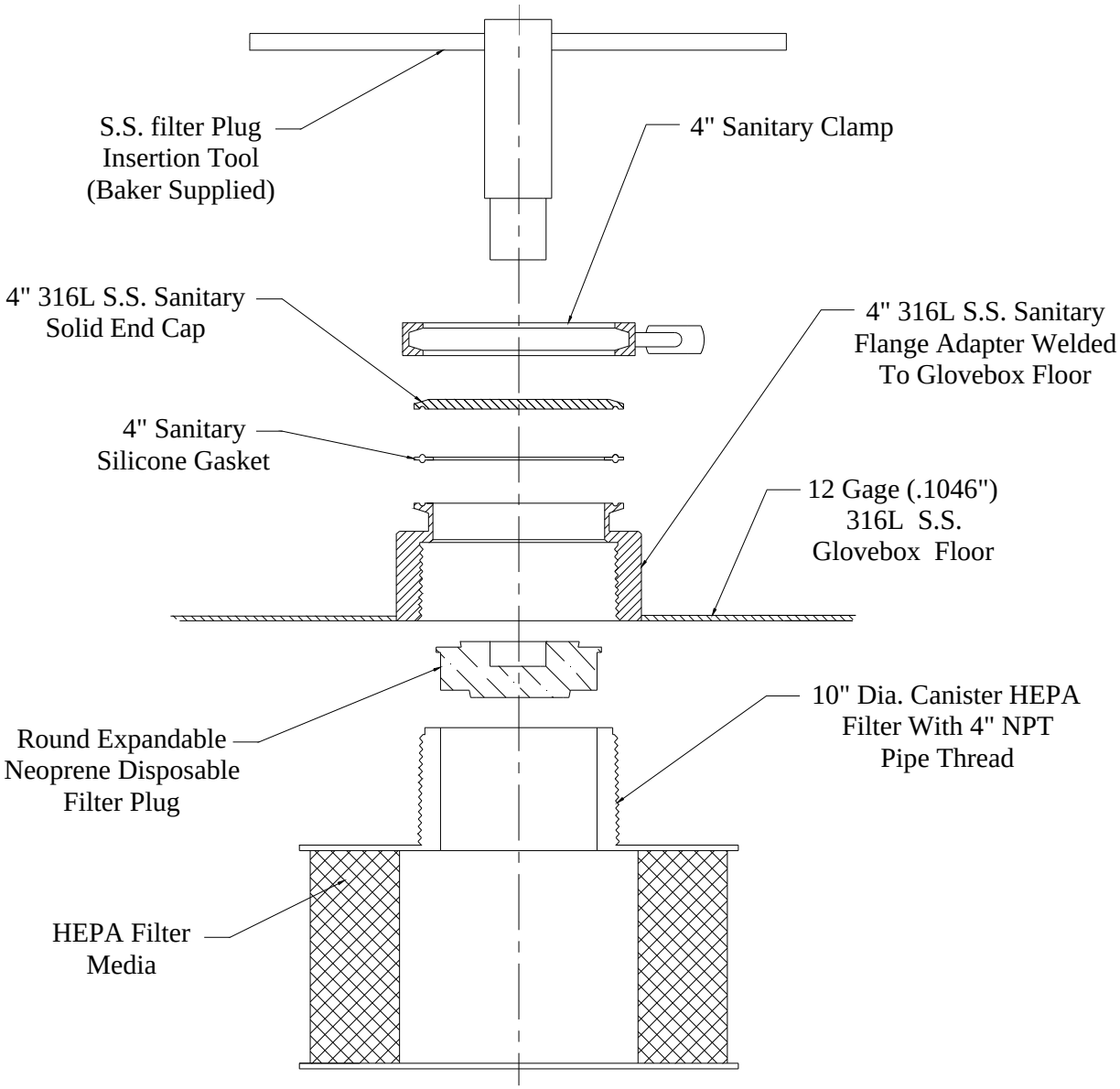

Typical Filter Section

Follow these procedures to replace the exhaust filter: (See Figures 1-6 Below)

1. Hinge the stainless steel work surface up until it rests on the back wall.
2. Inspect the plugs that will seal the filter and glove box. Each plug is composed of a rubber collar and a plastic insert. It is important that the insert is tightened into the collar before installing.

BAKER
Environments For Science™
P. O. Drawer E / 161 Gatehouse Road / Sanford, Maine 04073 / USA
800-992-2537 / 207-324-8773 / Fax: 207-324-3869 / bakerco@bakerco.com / bakerco.com

3. Bring the plugs, the wrench and the wipes into the Primary Chamber via the Pass-thru Chamber.
4. Wipe the inside of the collar to disinfect and remove debris. Discard of the wipe by pushing it into the filter.
5. Set the smaller plug into the air outlet pipe. It should stop against the top of the filter collar.
6. Place the wrench over the plug and securely tighten. If it does not tighten, remove the plug and re-tighten the two parts of the plug together before reinserting.
7. With the filter plug securely in place, secure 4” sanitary solid cover and clamp.
8. Remove the access panel from the front of the exhaust filter box.
9. Remove the canister filter by turning it counter-clockwise. The contaminated side of the filter is inside and sealed as long as the filter media is in tact and the plug remains on the filter. Bag and discard the used filter. Never remove the plug from a used filter.
10. Apply 2-3 layers of Teflon pipe tape to the threads of the new canister filter.
11. Remove the plug from the new filter (if pre-assembled).
12. Screw the new filter into the bottom of the Glovebox until it is tight. Take care not to cross thread the PVC into the stainless steel fitting.
13. Leak check each filter employing a scan or probe method.
14. Replace the access cover and all 14”-20 hardware.
15. Remove the 4” sanitary clamp and cover from the air outlet pipe. Remove the plugs and wrenches from the Primary Chamber. Return the work surface to the operating position. Re-install the orifice plate on the pass-through box.

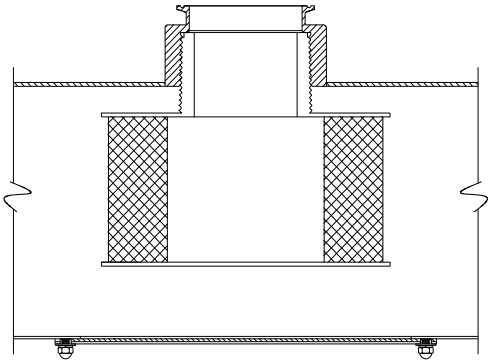

FIGURE 1

A. TO BEGIN FILTER CHANGEOUT, ASSURE INTERIOR OF ISOLATOR HAS BEEN FULLY DECONTAMINATED & CLEANED.

B. TURN OFF ISOLATOR PRESSURE FAN.

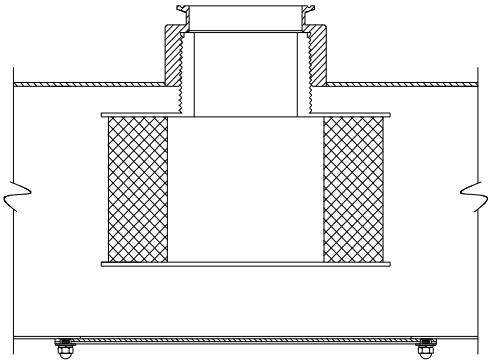

FIGURE 2

C. OPEN ISOLATOR ACCESS DOORS .

BAKER
Environments For Science™
P. O. Drawer E / 161 Gatehouse Road / Sanford, Maine 04073 / USA
800-992-2537 / 207-324-8773 / Fax: 207-324-3869 / bakerco@bakerco.com / bakerco.com

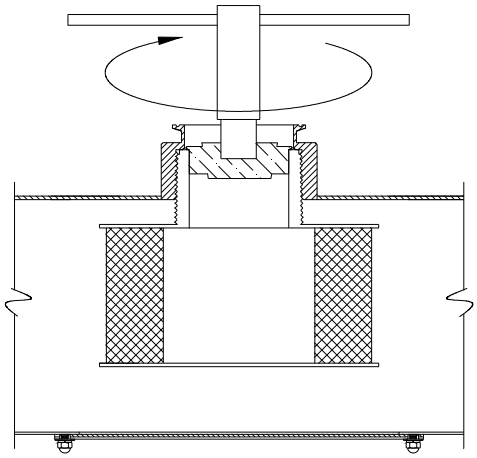

FIGURE 3

D. INSERT DISPOSABLE NEOPRENE FILTER PLUG THROUGH SANITARY FITTING UNTIL IT SEATS AGAINST FILTER COLLAR.

E. TIGHTEN FILTER PLUG USING INSERTION TOOL, 1/4 TURN BEYOND HAND TIGHT.

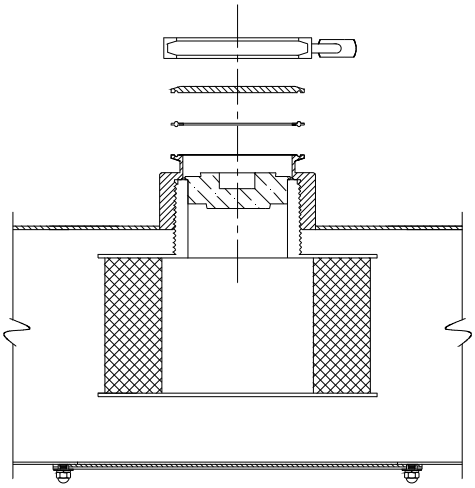

FIGURE 4

F. INSTALL A STANDARD 4" SANITARY CAP, GASKET, AND CLAMP TO ISOLATOR SANITARY FITTING.

G. TIGHTEN SANITATR CLAMP TO SEAL ISOLATOR FROM FILTER PLENUM.

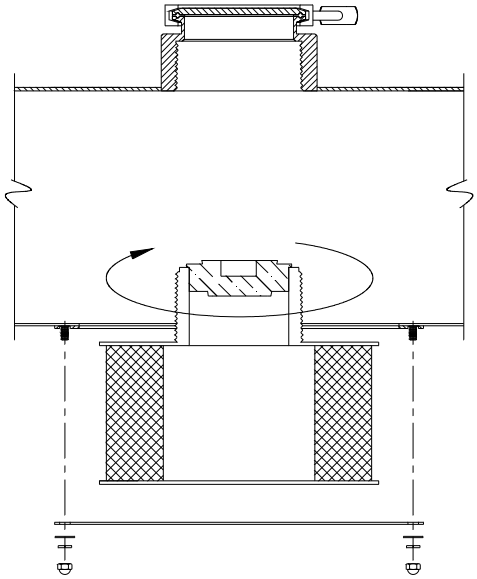

FIGURE 5

H. REMOVE EXTERIOR 1/4"-20 HARDWARE AND PLENUM ACCESS COVER.

I. REMOVE FILTER BY UNSCREWING COUNTERCLOCKWISE. NOTE: FILTER PLUG IS STILL IN PLACE.

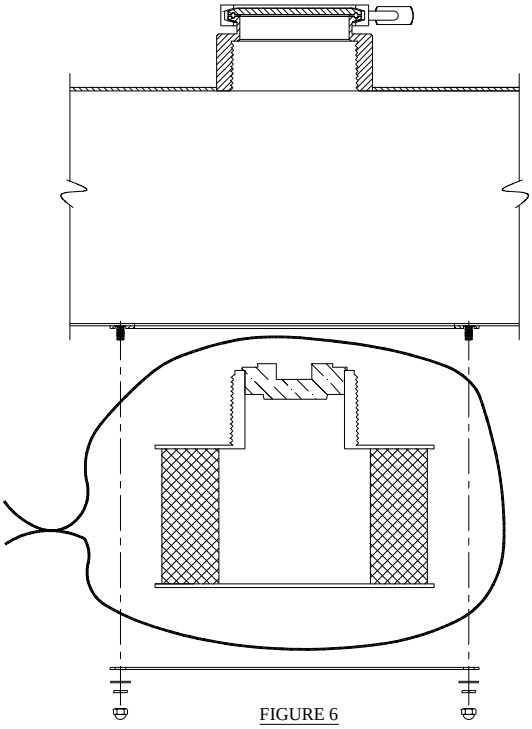

FIGURE 6

J. BAG-OUT CONTAMINATED FILTER AND INSTALL NEW FILTER (1/4 TURN BEYOND HAND TIGHT).

P. O. Drawer E / 161 Gatehouse Road / Sanford, Maine 04073 / USA
800-992-2537 / 207-324-8773 / Fax: 207-324-3869 / bakerco@bakerco.com / bakerco.com

2.2.2 Replacing the Exhaust Filters (Bag in Bag out Option)

Before removing any filters, the cabinet must be decontaminated (please see the following section for specifics on decontamination). The filters may have collected microorganisms and other potentially harmful particles generated in the work area during their lifetime, and maintenance personnel should not allow themselves to be exposed. It should also be remembered that a specific gaseous decontamination might work against microorganisms, but not against chemical agents. Where chemicals are present, consult an industrial hygienist or other qualified person.

To remove the supply/exhaust filters follow these procedures:

1. Remove the bagout cover by loosening the ¼”-20 acorn nuts. Temporarily store the cover while the subsequent steps are performed.
2. Unfold the yellow PVC bag from the inside of the Bagout snout. Use caution not to remove the bag from the snout ribbed surface. Verify that the web strap is securely tightened to the snout and that the Bungee cord hem is over the ribs on the snout.
3. Pleat out the wrinkles in the bag to make room for the filter to be transferred out of the filter plenum.
4. Use the hand mitts provided in the bag to loosen the four hand operated filter clamps.
5. Pull the old filter through the snout and into the PVC bag.
6. From the outside of the isolator, slowly work the old filter to be transferred toward the end of the PVC bag. Use the hand mitts provided in the bag to assist working the filter further into the bag.

P. O. Drawer E / 161 Gatehouse Road / Sanford, Maine 04073 / USA
800-992-2537 / 207-324-8773 / Fax: 207-324-3869 / bakerco@bakerco.com / bakerco.com

7. When the filter is at the end of the bag, begin twisting the bag at the halfway point between the filter and the end attached to the snout. Twist the bag until it is as tight as possible. **Caution be careful that the bag is not pulled off the bagout snout!**
8. Wrap the twisted bag tightly with duct tape in 2 places. Space the tape approximately 2 inches apart. Wrap the duct tape as tight as possible, include 3-4 turns around the twisted bag.
9. Using the PVC pipe cutters, cut the bag between the two taped areas.
10. The old filter is now free from the isolator in the contained stub-end of the PVC bag.
11. The remnant of the old PVC bag remains on the bagout snout on the isolator.
12. Remove the securing web strap from the old bag remnant and slide the Bungee cord forward to the last rib on the snout.
13. Put a new filter inside of a new replacement PVC bag and attach the yellow PVC bag over the old remnant and slide over the bagout snout to the inner rib.
14. Attach the securing strap and tighten the new bag to the snout for next use.
15. Reach in through the hand mitts of the new PVC bag and remove the old bag remnant from the snout by sliding it off and into the end of the new bag.
16. Work new filter forward in the PVC bag. Install new filter into filter plenum and clamp in place.
17. Fold up the new PVC bag and roll it into the snout in preparation for re-installation of the bagport cover.
18. Re-install the bagout cover and tighten the acorn nuts evenly.

2.3 Replacing the Supply Filters

Before anything is removed, the cabinet must be decontaminated (please see the following section for specifics on decontamination). The filters may have collected microorganisms, other potentially harmful particles generated in the work area during their lifetime, and maintenance personnel should not allow themselves to be exposed. It should also be remembered that a specific gaseous decontamination might work against microorganisms, but not against chemical agents. Where chemicals are present, consult an industrial hygienist or other qualified person.

To remove the supply filters follow these procedures: (See Illustration Below)

1. Completely decontaminate the interior of the IsoGARD.
2. Remove the top cover from the supply filter housing.
3. Pick the filter straight up off the gel seal channel and out of the supply filter housing.

4. Install the replacement gel seal filter.
5. Re-install the top cover.
6. Re-establish the proper pressure using the supply damper.

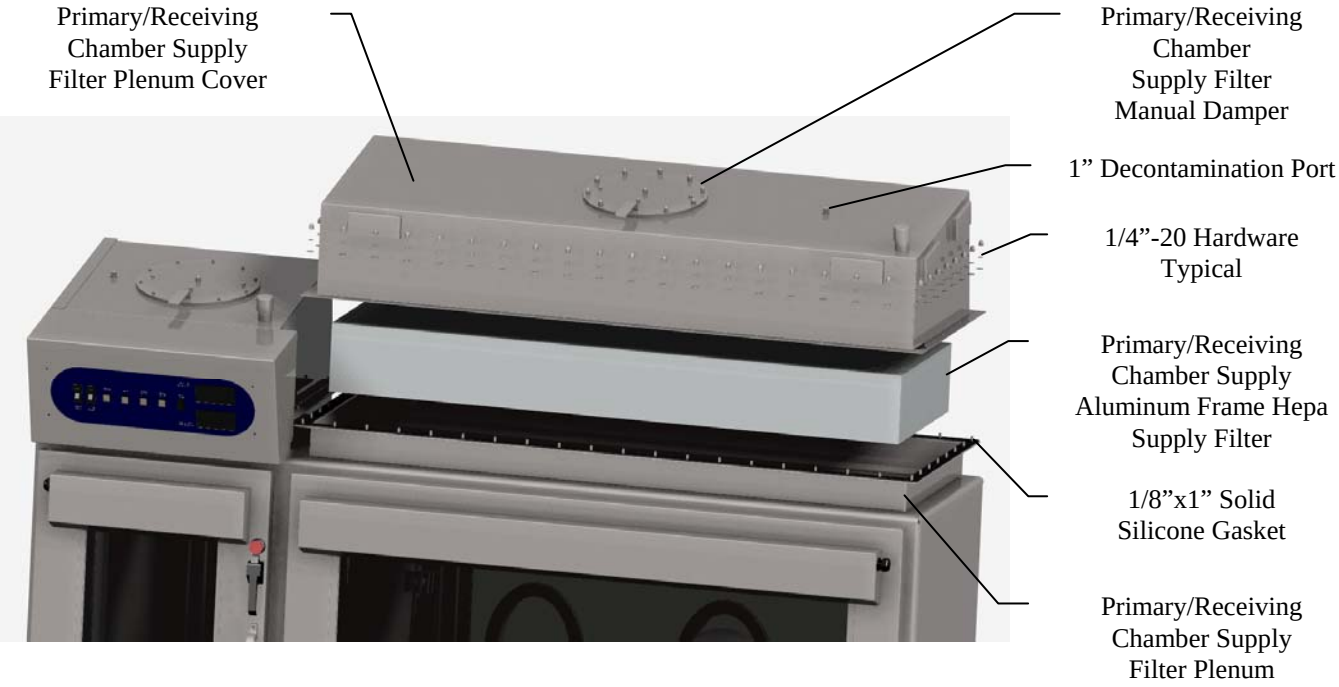

2.4 Decontamination & Clean Up Procedures

2.4.1 Gaseous Decontamination:

Whenever maintenance, service, or repair is needed in a contaminated area of your cabinet, an appropriate agent must first decontaminate the unit. The National Institute of Health, National Cancer Institute and the Center for Disease Control has all recommended the use of formaldehyde gas for most microbiological agents. Its application requires individuals, who are experienced in the decontamination of cabinets, since the gas itself is toxic.

An alternative decontamination agent an ethylene oxide gas mixture, but it involves a more complicated procedure and should only be used by personnel who are familiar with its operation.

Whatever gas you choose, have the proper safety equipment (gas masks, protective clothing, etc.) within easy reach. In addition, you will want to be sure that the gas you are using will be effective against all of the biological agents within the cabinet. When you have decided which gas to use, post the antidote to it in a visible and nearby location. Knowing the volume of your cabinet will help you provide the correct amount of decontaminating gas.

P. O. Drawer E / 161 Gatehouse Road / Sanford, Maine 04073 / USA
800-992-2537 / 207-324-8773 / Fax: 207-324-3869 / bakerco@bakerco.com / bakerco.com

2.4.2 Clean-up Procedures

At the time of this writing, the only industry accepted method of cleaning up after potent compound operations is a manual wipe down. Your unit is designed to make this procedure as quick and effective as possible.

The types of agents used will depend on your application. If the agent is corrosive to stainless steel then a secondary cleaning, to assure removal of the corrosive from the stainless steel interior, will be required.

The following is the suggested procedure for the interior wipe down of a standard IsoGARD Glovebox. Options provided with your unit may require a deviation of this procedure.

1. Wipe down all equipment inside the Primary Chamber.
2. Move all equipment to the Pass-thru Chamber for holding or perform a final cleaning and remove equipment.
3. Clean the Primary Chamber prior to cleaning the Pass-thru Chamber. Spray the back wall and wipe from top to bottom.
4. Clean the work surface top.
5. Hinge the work surface up and clean the bottom, working from the top down. Push all discarded towels to the rear of the unit as you work.
6. Thoroughly clean the small work surface that is beneath the divider door.
7. With the work surface still up, clean the sidewalls and the interior of the viewscreen.
8. Clean the floor working from front to back.
9. Collect all wipes and towels into a zip-lock bag. Place the zip-lock bag into the Pass-Thru chamber for removal.
10. With the door closed, clean the interior facing side of the door.
11. Clean the outside of the neoprene gloves.
12. Perform a wipe down of the Pass-thru Chamber by repeating the same general format as the Primary Chamber.
13. Before opening the door to the room, first re-establish the negative pressure in the unit.
14. Open the outer door. With your right hand in the glove use your left hand (also gloved) to clean the outside of the glove. Then use your right hand to remove the glove from your left hand and discard.
15. For wipe down of the Receiving Chamber repeat steps #1-11.

P. O. Drawer E / 161 Gatehouse Road / Sanford, Maine 04073 / USA
800-992-2537 / 207-324-8773 / Fax: 207-324-3869 / bakerco@bakerco.com / bakerco.com

2.5 Pressure & Flow Balance

The IsoGARD has been designed to accommodate a range of operating pressures and flows. Your unit has been factory set to parameters in accordance with industry standards.
To achieve a desired flow and pressure it will may be required to set the exhaust and supply damper through several iterations.

For all containment applications the unit should operate at a negative pressure greater than 0.5 inches of water column with sufficient flow to maintain at least a 100 feet per minute (FPM) breach velocity through a single open gloveport. Please be advised that establishing a negative pressure does not guarantee that the breach velocity has been satisfied. Consult the test report in the appendix of this manual for the proper range of operations.

The factory setting of the IsoGARD is such that both chambers operate at identical pressures. Should he user determine that a pressure 'cascade' between chambers is required due to the application, then it will be required to re-balance the unit. Small adjustment of the supply dampers, located on top of the supply filter housings, will achieve this result.

2.6 Using the Supply Damper to Establish Set Point

Your IsoGARD is supplied with two opposable dampers to facilitate separate air balancing of the Primary and Pass-thru Chambers. The supply dampers are adjusted using a sheet metal handle, which extends out over the top cover and is centered over the top of each chamber. Move the handle to your left to close the damper. As the damper closes it will create greater negative pressure in the chamber. Very small adjustments may create a large resulting pressure differential. The damper setting can be locked-down by tightening the ¼-20 hardware that secures the damper plates.

2.7 Using the Exhaust Damper to Control Flow Rate

The 4" butterfly damper provided on the exhaust filter housing features a locking ball & detent handle that allows the damper four discreet positions; full open, fully closed, and two intermediate positions. To open the damper push down on the handle while applying a clockwise twist of the handle.

2.8 Pass-thru box orifice plate

Your IsoGARD may be supplied with an orifice plate to optimize the air flow in the primary chamber and subsequently reduce flow in the pass-thru box. The plate is secured to the stainless steel nipple under the worksurface using the tri-clamp. It will be necessary to remove the plate when using the filter plug (refer to section 2.2). Permanently removing the orifice plate may result in a pressure & flow balance that is dramatically different then

what is prescribed in the test report for your unit. Likewise the user may choose to remove the plate or fashion an orifice plate that achieves a specific balance.

2.9 Door Operation and Adjustment:

2.9.1 Outer Pass-thru door

The Class III duty door provided with your IsoGARD utilizes a continuous metal edge imbedded into a solid silicon gasket to produce a gas-tight seal. The door has the dual purpose of providing a repeated seal with every use as well as a viewing area into the pass-through box. The door is also equipped with a single arm port for manipulation of items inside the pass-through box. Two cam-action latches with Baker's exclusive adjustable keeper post allows precise adjustment of the door seal. The combination of the door's weight and the knife edge creates a severe pinch hazard and users should always use the handle when opening and closing this door.

Caution: Improper use of the external door can result in injury to the operator. Use the handle at all times and avoid placing hands on the strike edges of the door.

Caution: Your IsoGARD is not provided with interlocking doors. The user should be aware that opening both inner and outer doors will result in loss of the personnel protection capabilities of the cabinet.

Door Open Operation:

1. Make certain that the inner door is closed and secured.
2. Unlock latches (if locking feature is supplied).
3. Place both hands on the latch handles and pull up on the handles making certain that the latch is fully opened and cleared of the keeper post. The latch handle should project up and remain in a position so as to be perpendicular to the door.
4. Using the handle pull the door open until it comes to a full stop against the door stop/ hinge brackets on the left side of the door.
5. The Isolator's low pressure alarm may activate as a result of the loss of pressure in the pass through box. Depress the Mute button to silence the alarm. Closing the outer door will re-establish the negative operating pressure in the pass-through box.

Door Closing Operation:

1. Make certain that the glove is oriented so as not to be pinched between the knife-edge and the gasket when the door is closed.
2. Check that the latch handles are in the raised (open) position.
3. Holding the door by the handle only, gently close the door.
4. Secure the door by pushing the latch handles down.

P. O. Drawer E / 161 Gatehouse Road / Sanford, Maine 04073 / USA
800-992-2537 / 207-324-8773 / Fax: 207-324-3869 / bakerco@bakerco.com / bakerco.com

5. Lock latches using key (if supplied).
6. Make certain that the chamber pressure returns to it's set point value.

Outer Door Adjustment:

Due to the likelihood of a permanent set of the gasket over time, where the knife edge is embedded into the silicon gasket, it may be necessary to make small adjustments of the door seal on a routine maintenance schedule. Adjustment of the class III door should be done concurrent with a class III leak check of the isolator to determine the location and magnitude of the leaks. As such the adjustment should be made by a certifier or maintenance person sufficiently trained in leak detection methods. For this reason the adjustable keeper post is designed to be adjusted with a tool only (adjustable wrench applied to the flats).

Wrench flats provided on the keeper allow the keeper to be retracted or extended from the base. Turn the keeper clockwise to produce a tighter latching force. A full turn of the keeper will result in 1/16" of retraction. It is recommended to turn each latch ¼ turn only.

Shims provided under each keeper and hinge block are also a method for making door-seal adjustments. Each shim provides 1/16" of gasket compression. Shim adjustments should be made carefully and with much consideration to the force required to operate the latches. Gasket compression (how far the knife-edge is embedded) is also an important consideration; overdoing may cause permanent gasket set and deformation.

2.9.2 Optional Hinged Viewscreen

The optional hinged viewscreen (AKA 'gull-wing' door) is similar to the outer pass-thru door with the exception that it is hinged to open from bottom to top. Although the number of latches used may also vary, the concept of operating the latches in unison should be maintained. Avoid latching or unlatching one side of the viewscreen only as this may cause an uneven distribution of force on the gasket. If possible operate the two latches that are on the outboard end first and then work in until all latches are closed or open.

Observe the following when operating the hinged front viewscreen:

- Do place both hands on the handles when opening and closing the viewscreen.
- Do pull the gloves partly out of the arm ports to avoid pinching the gloves when closing.
- Do operate the latches in unison.

- Do decontaminate the IsoGARD prior to opening.
- Do not close viewscreen until you check that all latches are in the full open position.

2.9.3 Inner door

The Class III duty door provided with your IsoGARD utilizes a continuous metal edge imbedded into a solid silicon gasket to produce a gas-tight seal. The door has the dual purpose of providing a repeated seal with every use as well as a viewing area into the pass-through box. Two cam-action latches with Baker's exclusive adjustable keeper post allows precise adjustment of the door seal.

Caution: Your IsoGARD is not provided with interlocking doors. The user should be aware that opening both inner and outer doors will result in loss of the personnel protection capabilities of the cabinet.

Door Open Operation:

6. Make certain that the outer door is closed and secured.
7. Pull up on the handles of each latch making certain that the latch is fully opened and cleared of the keeper post.
8. Rotate the door to the open position. It may be necessary to push the latch handles to the closed position to allow the door to open clear of the opening.
9. The Isolator's low pressure alarm may activate as a result of the loss of pressure in the pass through box. Depress the Mute button to silence the alarm. Closing the outer door will re-establish the negative operating pressure in the pass-through box.

Inner Door Adjustment:

Due to the likelihood of a permanent set of the gasket over time, where the knife edge is embedded into the silicon gasket, it may be necessary to make small adjustments of the door seal on a routine maintenance schedule. Adjustment of the class III door should be done concurrent with a class III leak check of the isolator to determine the location and magnitude of the leaks. As such the adjustment should be made by a certifier or maintained person sufficiently trained in leak detection methods. For this reason the adjustable keeper post is designed to be adjusted with a tool only.

Wrench flats provided on the keeper allow the keeper to be retracted or extended from the base. Turn the keeper clockwise to produce a tighter latching force. A full turn of the keeper will result in 1/16" of retraction. It is recommended to turn each latch ¼ turn only.

P. O. Drawer E / 161 Gatehouse Road / Sanford, Maine 04073 / USA
800-992-2537 / 207-324-8773 / Fax: 207-324-3869 / bakerco@bakerco.com / bakerco.com

Shims provided under each keeper and hinge block are also a method for making door-seal adjustments. Each shim provides 1/16" of gasket compression. Shim adjustments should be made carefully and with much consideration to the force required to operate the latches. Gasket compression (how far the knife-edge is embedded) is also an important consideration; overdoing may cause permanent gasket set and deformation.

Section III. Installation & Set-up

3.1 Checking the Glovebox upon arrival

Upon receipt of the new IsoGARD, first inspect the exterior of the box before it is removed from the skid. If there is any broken glass or other damage, that fact should be noted on the receiving slip and immediately reported to the carrier.

The IsoGARD is shipped in the as built / as-tested condition. No standard IsoGARD parts have been removed but many parts of the glovebox may be taped down to secure them from shipping vibration. Inspect the unit and carefully remove all yellow packing tape.

Remove the glovebox from the skid with a forklift or other available equipment.
Model 412,421 approx weight of Unit is
Model 413,431 approx weight of Unit is
Model 414,441 approx weight of Unit is

3.2 Checking Doorways & Pivot Spaces

Prior to moving the unit from the loading area check to assure that you have the proper allowances through doorways and pivot spaces to accommodate the unit's overall dimensions.

3.3 Installation Instructions

Observe the following steps to set-up and run the glovebox. The unit's dampers should already be set for factory test conditions (see test report) *do not attempt to remove any doors or glass panels, as it will void the factory seal test.*

The unit is ready for operation at the completion of the following checklist:

- Wood blocks and tape may appear on the inside and outside of the unit to assure the unit's safety during shipping. Remove all shipping materials from the unit.
- Open all doors to insure that they pivot freely.
- Hinge the filter diffusers up and down to insure that they move freely.

- Open the electrical console canopy and inspect for any shipping materials and/or shipping damage. Make certain that all connectors are engaged.
- Use the vibration/leveling pads to level the unit's work surface.
- Make all service connections to the unit (electrical, exhaust air & plumbing).
- With electrical power supplied to the units, make sure that the pressure monitors are working and displaying zero differential pressure (unit to room). In addition, the alarm should be active.

- Check that the unit's mute function is working by depressing the MUTE button. The audible alarms should turn off.

- Check the operation of the fluorescent lighting.

- Use the manual supply/exhaust opposable dampers to achieve the desired negative pressure and airflow. Refer to test report for factory test parameters.

3.4 Duct Connection

A single duct connection shall be made to the IsoGARD's 4" exhaust damper. The damper terminates with a 6" flange having eight (8) 3/8" holes on a 5" bolt circle. The user must provide the mating flange with a full face silicon gasket. The gasket shall be compressed using eight (8) ¼-20 or 5/16-24 bolts.

3.4a Establish a Negative Pressure Inside the Glovebox Chambers (for units *without* on board motor-blowers.)

Establishing the proper negative pressure inside each chamber of the IsoGARD is one of the most important aspects of setting-up and running. As previously mentioned the IsoGARD should operate below –0.5 inches of water column suction as defined by Class III requirements (see appendix). Use the manual supply and exhaust dampers to achieve the desired negative pressure and airflow. However establishing the operating pressure should be done with some consideration to the flow volume (the volume of air that moves through the IsoGARD).

The volume of air that will be pulled through the IsoGARD depends on the capacity of the exhaust system in which it will be connected. The minimum air volume shall be that required to maintain a glove breach velocity of at least 100 FPM at any gloveport opening. Since the IsoGARD utilizes an 8" diameter glove, having an area of 0.35 square feet, the minimum flow rate shall be 35 CFM per chamber (70 CFM for the standard two chamber unit). However since the IsoGARD has been specially designed to provide unidirectional

flow within it's working chambers, the capability of providing higher flow rates must be made where necessary.

The maximum flow rate for the IsoGARD is such that the exhaust canister filters, which are rated for 100 CFM each, are not used above capacity. To find the maximum flow capacity of your IsoGARD simply multiply the number of canister filters by 100 CFM. This will result in a very slow but unidirectional flow from the diffusers down to the work surface.

Section IV. Description of Test

The factory test is designed to demonstrate the Safety of the unit and the performance at the minimum required pressure and rated flow.

4.1 **Filter Media and Seal Leak Tests**

When preparing your cabinet for use after shipment, and then at prescribed intervals throughout its working life, you will need to verify that the HEPA filters have maintained their integrity. This is done by scan-testing the filter faces and seals.

The following procedures are intended to be performed by a qualified certifier who understands Biological safety & HEPA filter technology.

Equipment needed will be:

- An aerosol photometer. The instrument should sample air at a flow rate of 1.0 CFM.
- DOP generator with Laskin nozzle(s).
- Poly alpha Olefin (PAO) or comparable substance aerosolized by flowing air through the nozzle(s). When generated with Laskin type nozzle(s), the mean droplet size of the aerosol is 99 percent less than 3.0 microns.
- Auxiliary blower and challenge plate.

A. Procedure for Supply Filter Leak Test

This test requires exposure to the interior of the Glovebox. It is necessary to decontaminate and/or thoroughly clean the inside the Glovebox following the recommendations of your Safety Officer.

P. O. Drawer E / 161 Gatehouse Road / Sanford, Maine 04073 / USA
800-992-2537 / 207-324-8773 / Fax: 207-324-3869 / bakerco@bakerco.com / bakerco.com

This test is performed by challenging the supply filters with aerosol from the top of the unit and scanning the downstream face of the filter (i.e. the side of the filter that is exposed to the work area environment). This test can be performed through gloveports. One or more gloves may have to be removed to use the scanning equipment.

The procedure for leak testing the supply filters is as follows: (See Illustration Below)

1. Close and remove the supply damper.
2. Attach auxiliary blower and challenge plate to supply damper opening on the plenum cover.
3. Remove the 3/8” NPT plug from the top of the supply filter plenum and thread in an adapter piece that will allow for the photometer to measure the upstream concentration of aerosol challenge introduced into the supply filter area
4. Turn on the aerosol photometer and standardize according to the manufacturer's instructions.
5. Position the PAO generator to introduce the challenge into the auxiliary blower air intake.
6. Measure the upstream concentration of PAO.
7. From the inside of the unit release the supply air diffuser from the front holding clip (push it up and back) and swing it down until it rests on the rear wall.
8. Scan the down stream side of the filter by holding the photometer probe about one inch from the filter face. Scan in overlapping strokes at a rate of approx. 2” per second.
9. Also check the seal between the filter gasket and the glovebox.
10. If you find leaks, repair the HEPA filter media with silicone RTV sealant.
11. A HEPA filter is considered acceptable when there are no leaks greater than 0.01% of upstream concentration.

BAKER
Environments For Science™
P. O. Drawer E / 161 Gatehouse Road / Sanford, Maine 04073 / USA
800-992-2537 / 207-324-8773 / Fax: 207-324-3869 / bakerco@bakerco.com / bakerco.com

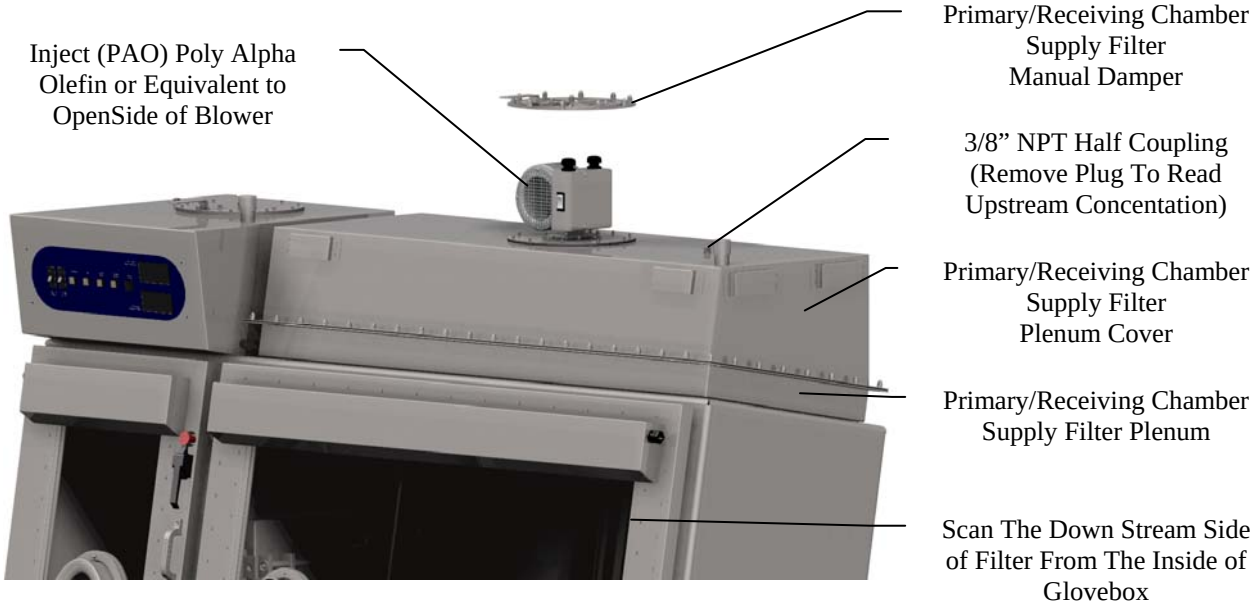

B. Procedure for Exhaust Filter Leak Test

This test will be performed by introducing aerosol into the air outlet pipe located under the work surface and scanning the outside of the canister filter through the access opening under the exhaust filter box.

1. Hinge the stainless steel work surface up until it rests on the rear wall. Install the auxiliary blower over the air outlet pipe.
2. Remove the access cover from the front of the exhaust filter box.
3. Turn on the aerosol photometer and calibrate according to the manufacturers instructions.
4. Measure the upstream concentration of aerosol.
5. Scan the filter face and seal (the canister filter is sealed using a 4"x4" NPT sanitary adapter on the bottom of the Glovebox and the molded 4" NPT canister filter thread).
6. If gasket leaks are detected try twisting the filter clockwise to tighten. If the media is damaged the canister will have to be replaced.
7. A HEPA filter is considered acceptable when there are no leaks greater than 0.01% of upstream concentration.

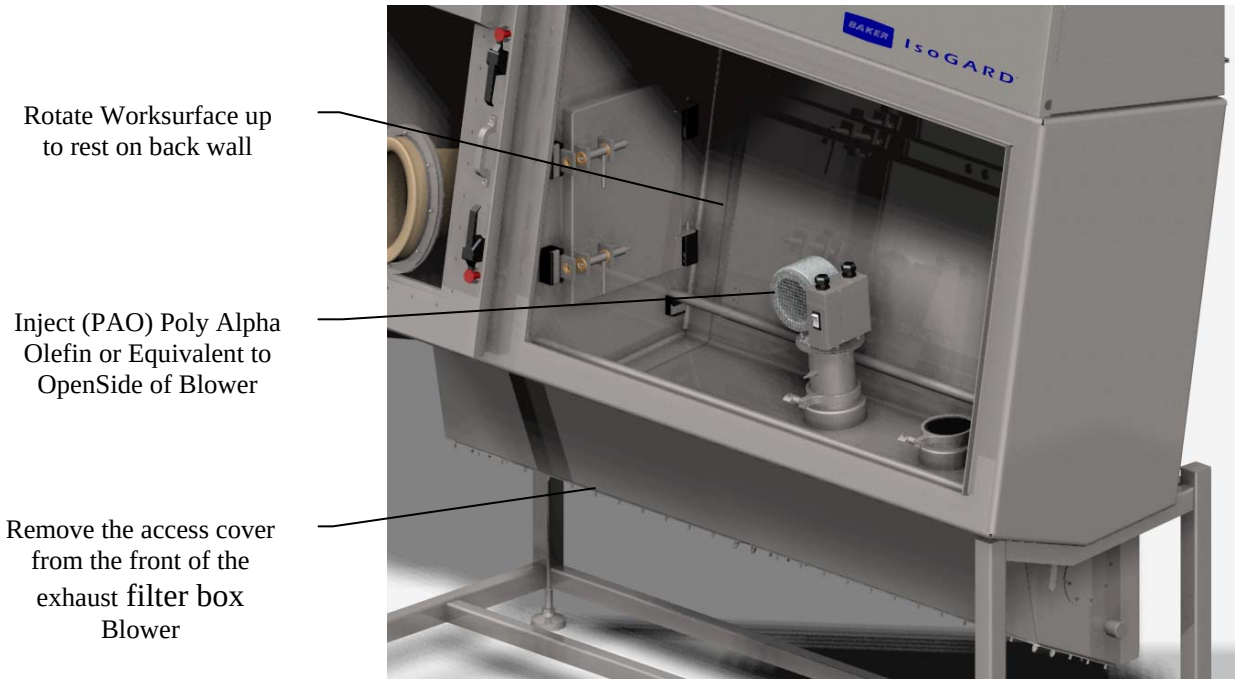

4.2 Pressure Decay Test

The Pressure decay tests shall be conducted for each the Primary and Pass-Thru Chambers. Using a compressed air line (positive pressure) or a vacuum pump (negative pressure) perform a gross seal integrity test with the unit completely sealed (doors closed and locked, all valve closed, and air tight dampers removed and openings covered with test plates). Refer to section 10.5.2 of the American Glove Box Society Guidelines for Gloveboxes (AGS-G001-1994) provided at the end of this manuals.

Use the drain valve connection on the bottom of the unit to pressurize the unit. Attach an auxiliary pressure monitor to the hose barb under the console cover by removing the tubing from the unit's digital pressure monitor.

Caution: Avoid over pressurizing the unit as it may crack the glass viewscreens. Limit pressure to 4" W.C. maximum.

4.3 Mass Spectrometer Leak Testing

The Mass Spectrometer Leak test (MSL) is required on a Class III glovebox and should be performed in addition to pressure decay. In conducting the MSL always test the Primary Chamber first to check the door seal between the Primary Chamber and the Pass-thru Chamber, then test the Pass-thru Chamber either separately or with the inner door opened.

P. O. Drawer E / 161 Gatehouse Road / Sanford, Maine 04073 / USA
800-992-2537 / 207-324-8773 / Fax: 207-324-3869 / bakerco@bakerco.com / bakerco.com

A. Using Sulfer-Hexa-Flouride Gas

Using the drain valve conduct the seal test using sulfa-hexa-fluoride gas (SF6). Allow the pressurized gas to bring the Glovebox pressure to +3" W.G. Use a dedicated SF6 leak meter (Ion Track Inc. or equivalent) to sniff for leaks.

In testing for a leak, the nozzle of the probe shall be held at the surface of the unit being tested in such a manner as not to jar the instrument and should be moved at a rate of 2" per second. Readings at all points must not exceed 1 x 10^{-7} cc/sec.

Take care not to allow SF6 to escape into the room as that may result in a false positive reading; it should be exhausted to the outdoors. Flush the SF6 from the box to the outdoors (not the room) using either the floor mounted drain or the rear wall mounted 1/2" NPT coupling.

B. Using Helium/ Helium Balloon-Drop Method

The following description is required to allow a high concentration of helium into the Primary/Pass-Thru chambers in order to perform a Class III MSL. In the set-up of this test a large quantity of helium gas may be discharged from the cabinet. Although helium is not toxic the test should be conducted in a well ventilated room. Proper ventilation will expedite the process in quickly reducing the background concentration of helium. Note that the helium, when injected into the sealed primary chamber and maintained at 3" WC pressure, will not provide sufficient sensitivity for a Class III leak test but may be used a rough-in test prior to final leak testing.

Required for helium balloon-drop method:

- One large diameter Balloon. (capable of making a balloon of between 16 and 20: diameter)
- Helium leak detector
- Standard leak capable of 2 x 10^{-5} cc/s he.
- Helium gas.
- Fittings for 3/8" & 1/2" NPT (as required).
- Calibrated pressure gauge capable of measuring differential pressure in inches of water column from zero to 3" (0-3" WC).

Helium Balloon-Drop Method:

1. Start helium leak detector and calibrate to a leak of 2 x 10^{-5} cc/s using a standard leak.

P. O. Drawer E / 161 Gatehouse Road / Sanford, Maine 04073 / USA
800-992-2537 / 207-324-8773 / Fax: 207-324-3869 / bakerco@bakerco.com / bakerco.com

2. Fill helium balloon inside primary chamber to a diameter of at least 16” (50” in circumference). Avoid over filling the balloon as it must be free to move about inside the chamber without being pinched or

3. constrained between the back wall and the viewscreen. The inflated balloon will rise inside the ambient air of the primary chamber.
4. Disconnect the tygon hose from the primary chamber to the unit’s differential pressure monitor and attach a calibrated pressure gauge capable of reading up to 3 inches of water column.
5. Attach a line from the helium bottle to the fitting at the rear of the unit.
6. Open the drain valve of the primary chamber.
7. Attach the helium bottle to either the 3/8” or ½” NPT port on the rear wall.
8. Flow the helium into the primary chamber so as to purge the air out through the drain valve. A high concentration of helium is achieved when the balloon falls to the worksurface. Immediately close the drain valve, bring the pressure (as displayed on the auxiliary gauge) to 3” WC and then turn-off the helium source.

9. With the helium leak detector running and sampling the air around the IsoGARD wait for the helium concentration in the ambient air to fall below the alarm set point (2×10^{-5} cc/s).
10. Conduct a leak test of the primary chamber by ‘sniffing’ seams and seals while maintaining a pressure of 3”.
11. Test the pass-through box by opening the door and returning the pressure to 3”. If the balloon becomes buoyant it may be necessary to purge the air from the box by repeating steps 5 through 8.

4.4 Airflow testing

You will need to measure and record the flow volume or down flow velocity of the unit. The rated airflow for your glovebox is as follows.:

- Model 412, 421: 225 CFM nominal +/- 5%
- Model 413, 431: 225 CFM nominal +/- 5%
- Model 414,441: 225 CFM nominal +/- 5%

There are several methods of measuring the flow volume of the unit. The best way will depend on your application. Some suggestions are as follows:

- Perform a velocity traverse at the end of an exhaust duct.

P. O. Drawer E / 161 Gatehouse Road / Sanford, Maine 04073 / USA
800-992-2537 / 207-324-8773 / Fax: 207-324-3869 / bakerco@bakerco.com / bakerco.com

- Using an anemometer make a number of velocity readings directly under the supply filter with the diffuser removed. *Do not allow the instrument to touch the media pack!*

To check for the direction of air movements through doors and over the work surface use a smoke generator or smoke stick. Observe that the smoke is moving in the proper direction for safety conditions as described by your safety officer.

4.5 Electrical Test

Using a volt-ohmmeter set it to read in excess of 100 ohms. Touch the two leads together and see that the display reads "0.1-0.0". Touch one lead to the ground lug on the cabinet power cord while touching the other lead to bare metal on the unit where the user would be likely to touch the enclosure. If the display reads "0.1-0.0" ohms, the unit passes the test.

Environments For Science™

P. O. Drawer E / 161 Gatehouse Road / Sanford, Maine 04073 / USA
800-992-2537 / 207-324-8773 / Fax: 207-324-3869 / bakerco@bakerco.com / bakerco.com

Section V. Appendix

5.1 Replacement Parts List

PART NAME	QTY	BAKER PART NUMBER
Blower Assembly	1	34759
Filter, Exhaust, Canister Sleeved	3	412A224
Filter, Supply, 18” x 18” x 5” (Pass Through)	1	40136
Filter, Supply, 18” x 34.5” x 5” (Main Chamber)	2	40383
Filter, In-Line Millipore HEPA	2	36630
Power Supply, 24V DC, .75A	1	41639
Fluorescent lamp	5	38682
Ballast, fluorescent	3	43432
Pressure Monitor/Alarm	2	43139
Gloves, Hypalon size 9-3/4 Ambidextrous	5	35791
Latch, Door	7	40113
Sensor, GEMs Liquid Level	1	41139

Please specify the part by Baker Part Number and quantity when ordering.

Environments For Science™

P. O. Drawer E / 161 Gatehouse Road / Sanford, Maine 04073 / USA

800-992-2537 / 207-324-8773 / Fax: 207-324-3869 / bakerco@bakerco.com / bakerco.com

APPENDIX
5.2
Test Report

Environments For Science™

P. O. Drawer E / 161 Gatehouse Road / Sanford, Maine 04073 / USA

800-992-2537 / 207-324-8773 / Fax: 207-324-3869 / bakerco@bakerco.com / bakerco.com

APPENDIX
5.3
Electrical Schematic

Environments For Science™

P. O. Drawer E / 161 Gatehouse Road / Sanford, Maine 04073 / USA

800-992-2537 / 207-324-8773 / Fax: 207-324-3869 / bakerco@bakerco.com / bakerco.com

APPENDIX,
5.4
Mechanical Drawings

Environments For Science™

P. O. Drawer E / 161 Gatehouse Road / Sanford, Maine 04073 / USA
800-992-2537 / 207-324-8773 / Fax: 207-324-3869 / bakerco@bakerco.com / bakerco.com

APPENDIX,
5.5
Bill of Materials

Environments For Science™

P. O. Drawer E / 161 Gatehouse Road / Sanford, Maine 04073 / USA

800-992-2537 / 207-324-8773 / Fax: 207-324-3869 / bakerco@bakerco.com / bakerco.com

5.6 Glove Change Procedure

1. Loosen glove clamp and stage new glove.

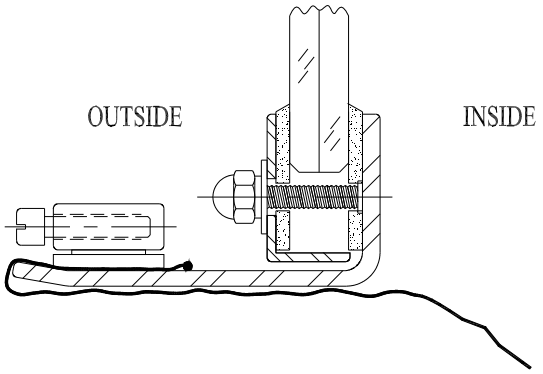

2. Remove glove clamp from armport.

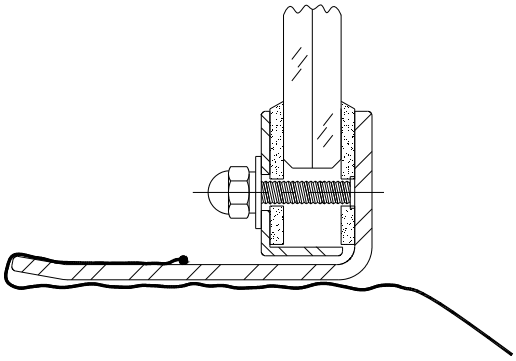

Environments For Science™

P. O. Drawer E / 161 Gatehouse Road / Sanford, Maine 04073 / USA

800-992-2537 / 207-324-8773 / Fax: 207-324-3869 / bakerco@bakerco.com / bakerco.com

3. Slide cuff bead of old glove away from old glass evenly to flare on port.

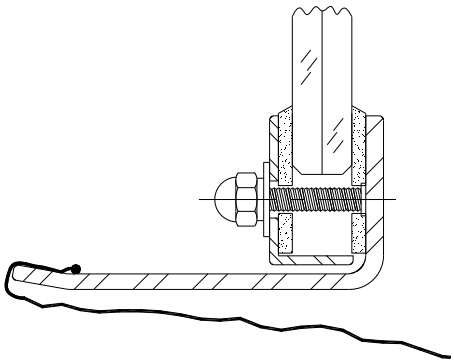

4. Stretch the new glove over the glove and onto the armport.

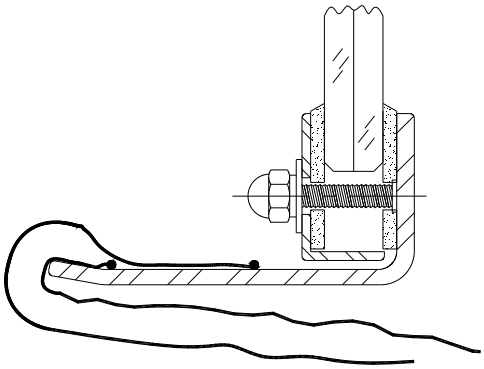

:

5. Re-install the clamp gasket and clamp.

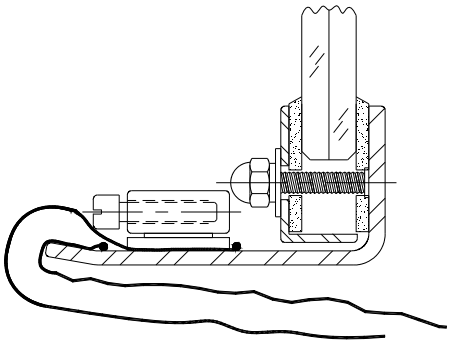

6. Pull the old glove into the isolator using and adjacent armport or with the newly installed glove.

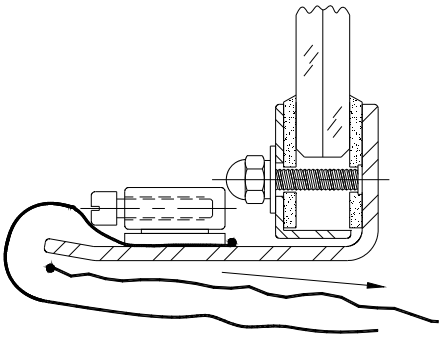

P. O. Drawer E / 161 Gatehouse Road / Sanford, Maine 04073 / USA
800-992-2537 / 207-324-8773 / Fax: 207-324-3869 / bakerco@bakerco.com / bakerco.com

7. Verify all hardware is tight, properly dispose of old glove.

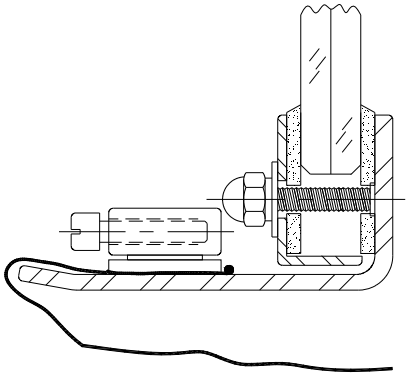

5.7 Documents And Specifications for Class III Cabinetry:

- **Federal Register 1976.**
- **Laboratory Safety Monograph 1979.**
- **Federal Register 1988.**
- **NSF International Std 49 for Class II (Laminar Flow)Biohazard) Cabinetry (Latest Revision 1992)**

- **Center For Disease Control** *J National Institutes* **of Health (Latest Revision 1993).**
- **Fort Detrick** *J* **U.S. Army Medical Research Institute of Infectious Diseases {Latest Revision 1990).**

Class III Biological Safety Cabinet is a totally enclosed ventilated cabinet of gastight construction. Operations within the Class III cabinet are conducted through attached rubber gloves. The Class III cabinet is maintained under negative pressure of at least

P. O. Drawer E / 161 Gatehouse Road / Sanford, Maine 04073 / USA
800-992-2537 / 207-324-8773 / Fax: 207-324-3869 / bakerco@bakerco.com / bakerco.com

0.5 inches water gage. Supply air is drawn into the cabinet through HEPA filters. The cabinet exhaust air is filtered by two HEPA filters installed in series or one HEPA filter and an incinerator. The exhaust fan for the Class III cabinet is generally separate from the exhaust fans of the facility ventilation system."... ..."Performance specifications for leak tightness is at <1 x 10-5 cc/sec at 3" w.g. pressure."
All operations in the work area of the cabinet are performed through attached rubber gloves. The Class III cabinet is operated under negative pressure. Supply air is HEPA filtered, and the cabinet exhaust air is filtered by two HEPA filters in series or HEPA filtration followed by incineration, before discharge outside of the facility.

5.8 Pressure Decay Test

The Pressure decay tests shall be conducted for the Main Chamber and then for Receiving Chamber. Using a compressed air line perform a gross seal integrity test with the unit completely sealed (doors closed and locked, all valve closed, and air tight dampers closed,). Refer to your test report to repeat the pressure decay test.

Use the drain valve connection on the bottom of the unit to pressurize the unit. Attach an auxiliary pressure monitor to the hose barb under the console cover by removing the tubing from the unit's pressure monitor.

Avoid over pressurizing the unit as it may crack the glass viewscreens. Limit pressure to 3.5" W.C. maximum.

Environments For Science™

P. O. Drawer E / 161 Gatehouse Road / Sanford, Maine 04073 / USA

800-992-2537 / 207-324-8773 / Fax: 207-324-3869 / bakerco@bakerco.com / bakerco.com

APPENDIX
5.9
Modus Installation and Operation Handbook

BAKER
Environments For Science™

P. O. Drawer E / 161 Gatehouse Road / Sanford, Maine 04073 / USA
800-992-2537 / 207-324-8773 / Fax: 207-324-3869 / bakerco@bakerco.com / bakerco.com

MODUS

MPM-1✦ MPM-2
Pressure Indicator/Transmitter with Alarms

Installation and Operation

MODUS Instruments, Inc.®
a division of General Eastern Instruments

Contents

BAKER
Environments For Science™
P. O. Drawer E / 161 Gatehouse Road / Sanford, Maine 04073 / USA
800-992-2537 / 207-324-8773 / Fax: 207-324-3869 / bakerco@bakerco.com / bakerco.com

Introduction

The Modus MPM family of instruments provides low-cost monitoring of differential pressure for air and other clean inert gases. These instruments have large, digital displays and are packaged in compact ⅛ DIN cases.

The model MPM-1 is the basic instrument, with a numeric display. The MPM-2 adds LED alarm indicators with adjustable set points, optional relay outputs, and optional analog outputs. Optional outputs can be added at a later time by returning the unit to the factory. Either model may be ordered with English display units (inches H_2O) or metric units (kPa).

Available ranges and units:

English units (In. H_2O)		Metric units (kPa)	
Nominal range	Maximum displayed value	Nominal range	Maximum displayed value
± 2" H_2O	± 1.999	± 2 kPa	± 1.999
± 5" H_2O	± 5.00	± 5 kPa	± 5.00
± 10" H_2O	± 10.00		
± 20" H_2O	± 19.99		

The remainder of this manual uses the 2" H_2O model for examples.

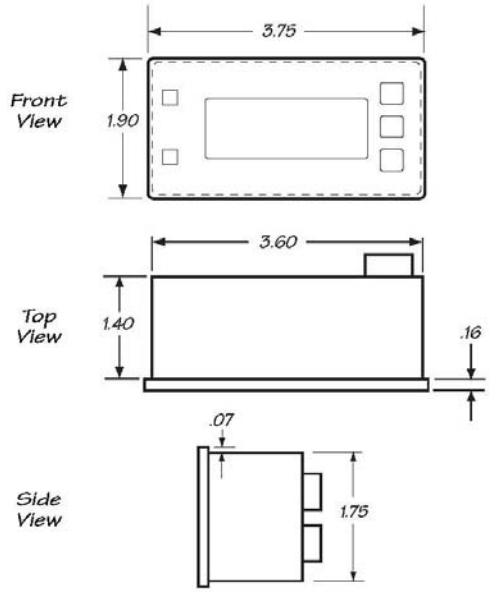

Figure 1 – Front, Top and Side Views

BAKER
Environments For Science™
P. O. Drawer E / 161 Gatehouse Road / Sanford, Maine 04073 / USA
800-992-2537 / 207-324-8773 / Fax: 207-324-3869 / bakerco@bakerco.com / bakerco.com

Installation

Mounting

The MPM family of products is designed to mount into a standard 1/8 DIN panel cutout. Panel thickness can be up to 1/4" thick. An accurate panel cutout is important because the 1/8 DIN standard specifies a narrow flange. The flange secures the unit to the panel and also provides the bearing surface for the optional NEMA 4 gasket.

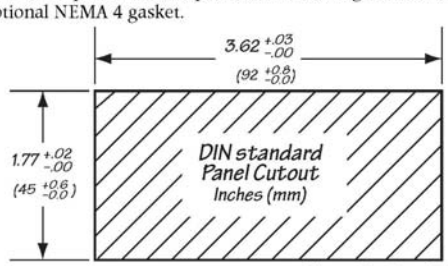

Figure 2 – Panel Cutout

Be sure to leave enough space behind the unit for the pressure tubing to bend without kinking.

After the panel has been cut, slide the unit through the panel cutout. While holding the unit firmly against the panel, slide the panel retention clip over the rear of the panel meter with the tension arms facing the rear of the panel. Push the reten-

tion clip firmly against the rear of the panel. The clip will automatically lock into position.

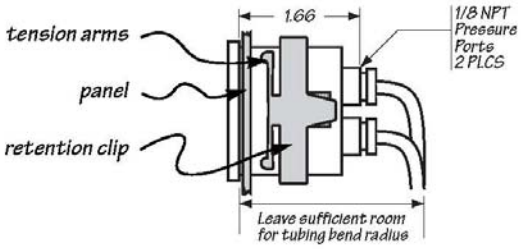

Figure 3 – Side View with retention clip

To remove the panel meter, unlock the retention clip by spreading the clip ears on both the left and right sides. While the ears are spread, slide the retention clip away from the panel. The same retention clip may be used again to re-install the panel meter.

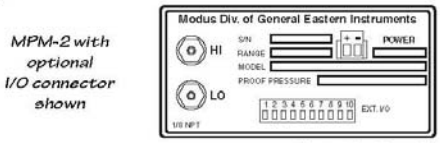

Figure 4 – Rear View

Connecting pressure lines

The pressure ports, located at the rear of the unit, are labelled **HI** and **LO**. If the **HI** port has a positive pressure relative to the **LO** port, the front panel display will read positive (+). If the **HI** port pressure is lower than the **LO** port pressure, the display will read negative (–).

The pressure ports accommodate any standard ⅛" NPT male fittings. Two fittings suitable for most applications are provided with the unit. The fittings support tubing with ⅛" internal diameter. If your application requires a different tubing size, unscrew the supplied fittings and install a fitting to adapt your tubing size to the unit's ⅛" NPT female threads.

Plastic fittings usually do not require thread sealing compounds or tapes, provided they are properly tightened. While not recommended, metal fittings can also be used, with the following precautions:

- Thread sealing compounds or tapes may be required, depending on the amount of leakage your application can tolerate.
- Be careful not to strip the plastic threads.

Do not allow material of any kind to fall into either pressure port—contamination could lead to inaccurate readings or damage to the internal sensor.

For accurate measurements made with respect to ambient pressure, run a return line to the measurement point rather than simply leaving the second port open to the atmosphere.

BAKER
Environments For Science™
P. O. Drawer E / 161 Gatehouse Road / Sanford, Maine 04073 / USA
800-992-2537 / 207-324-8773 / Fax: 207-324-3869 / bakerco@bakerco.com / bakerco.com

Electrical connections

Power connections

Refer to the rear label of the unit for the power supply range that your particular model supports. All models require D.C. power, and therefore polarity must be observed. The polarity is indicated on the rear label as well as on the screw-terminal power connector provided with the unit.

The power connector's two screw terminals accommodate wire sizes between 14 and 26 AWG. Either stranded or solid conductor wire can be used. The power connector can be unplugged from the rear of the unit to ease the installation of the wires. The connector is keyed to prevent incorrect insertion. Models with no optional outputs draw a maximum of 30 mA of current. See Appendix A for current draw of other models.

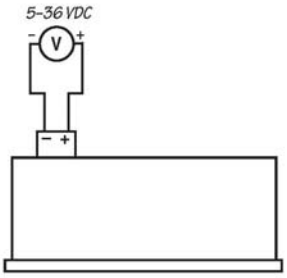

Figure 5 – Wiring with no options

BAKER
Environments For Science™
P. O. Drawer E / 161 Gatehouse Road / Sanford, Maine 04073 / USA
800-992-2537 / 207-324-8773 / Fax: 207-324-3869 / bakerco@bakerco.com / bakerco.com

Note: The remainder of this Installation Section refers to model MPM-2, with options installed, only.

Optional relay output connections

The optional relay board has two relays, one controlled by the **HI** alarm LED and the other by the **LO** alarm LED.

Relay outputs are wired to the 10-pin connector supplied with the unit (see Figure 7). The 10-pin connector can be removed from the unit to facilitate connecting the wires.

Each relay has a **common** connection with **normally-open** and **normally-closed** contacts. Relay contacts are rated at 2 amps at 30 VDC (derated to 1.0 amp at 120 VAC).

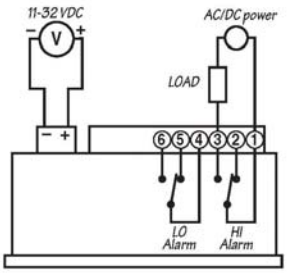

Shown in "No Alarm" condition

pin 1: HI Alarm Common
*pin 2: HI Alarm N.C.**
pin 3: HI Alarm N.O.
pin 4: LO Alarm Common
*pin 5: LO Alarm N.C.**
pin 6: LO Alarm N.O.

** N.C contacts closed when in "no alarm" condition.*

Figure 6 – Wiring with Relays

High-current contacts are available as an option. They are rated at 7 amps at 30 VDC or 120/250VAC, but they should not be used for low-current control use (currents below 100 mA).

Relays are designed to be failsafe: they will switch to the alarmed position if the relay coil current fails. This means a power loss will force both relays into the alarm state.

1	*HI Alarm Common*
2	*HI Alarm N.C.*
3	*HI Alarm N.O.*
4	*LO Alarm Common*
5	*LO Alarm N.C.*
6	*LO Alarm N.O.*
7	*Voltage Out (0–5 VDC)*
8	*Analog Ground (Isolated)*
9	*Current Out*
10	*+ Analog Power (Isolated)*

Figure 7 – External I/O output wiring

See page 14 for programming the relay set points.

A deadband provides hysteresis to keep the relay contacts from chattering when the pressure value fluctuates about the set-point. See page 15 for setting the width of the deadband.

Optional analog output connections

Analog output pins provide voltage (0–5VDC) and current (4–20mA or 0–20mA) outputs.

Voltage and current outputs are supplied on separate connector pins, and are available simultaneously.

The analog output is isolated from the unit's input power, and a source of DC power must be connected to pin 10 (+) and pin 8 (–) of the I/O connector. This voltage can range from +11 to +32 volts DC. If power supply isolation is not a concern, then

BAKER
Environments For Science™
P. O. Drawer E / 161 Gatehouse Road / Sanford, Maine 04073 / USA
800-992-2537 / 207-324-8773 / Fax: 207-324-3869 / bakerco@bakerco.com / bakerco.com

power for the analog output circuitry can be tapped from the MPM's main power connection.

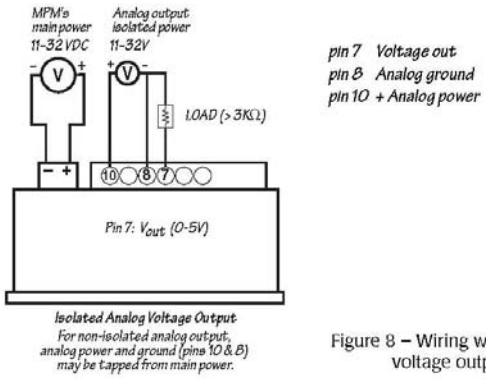

Figure 8 – Wiring with voltage output

Analog outputs are wired to pin 7 (voltage) and/or pin 9 (current) of the 10-pin connector supplied with the unit (see Figure 7). The 10-pin connector can be removed from the unit to facilitate connecting the wires.

The analog output is proportional to pressure. Any one of six offset settings may be selected. See page 18 for programing these outputs. The factory default is Analog Offset Setting 0 (at

zero pressure, analog voltage out = 2.50V and analog current out = 10.0 mA).

The voltage output should be connected to a load of 3,000 ohms or greater.

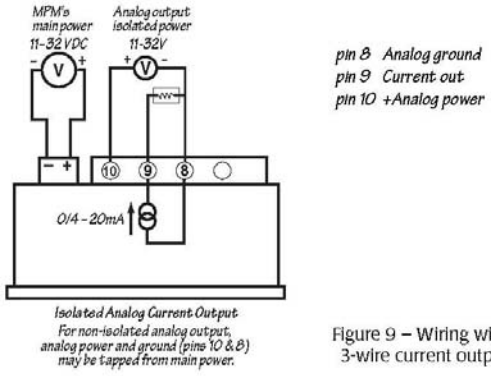

Figure 9 – Wiring with 3-wire current output

Environments For Science™

P. O. Drawer E / 161 Gatehouse Road / Sanford, Maine 04073 / USA

800-992-2537 / 207-324-8773 / Fax: 207-324-3869 / bakerco@bakerco.com / bakerco.com

Operation

Power-up test

When power is applied, the unit begins a 20-second diagnostic test which activates all LCD segments (and the LEDs on the MPM-2), cycling each character through all digits. The user should visually verify that all indicators function properly.

Figure 10 – LCD Readout

Pressure display

After the power-up test is complete, the panel meter displays pressure readings. If the input pressure is greater than the unit's maximum (see the table on page 1), the display indicates over-ranging by flashing the full-scale value (e.g., 1.999" for 2" models).

Zero function

The unit should be zeroed after installation in its final position, and whenever its orientation is changed. The unit may be used in any position, but the internal sensor is position sensitive.

To zero the panel meter, disconnect the tubing from both fittings so that the differential pressure is known to be zero. With both pressure ports exposed to the same environment, press and hold the **ZERO** button for at least three seconds, until the display reads .000. The unit does not need to be re-zeroed each time power is reapplied, because all calibration and user settings are saved in non-volatile memory.

BAKER
Environments For Science™
P. O. Drawer E / 161 Gatehouse Road / Sanford, Maine 04073 / USA
800-992-2537 / 207-324-8773 / Fax: 207-324-3869 / bakerco@bakerco.com / bakerco.com

Optional I/O programming (MPM-2 only)

General programming information

To enter the MPM-2's programming mode, press the **MODE** button. Repeatedly pressing **MODE** steps through all programming modes in sequence. It is necessary to step through all entries to leave programming mode and return to normal operation.

All the values programmed into the unit are stored in non-volatile memory. They do not need to be reentered whenever power is reapplied.

In general, values are entered as follows while in programming mode: A single digit of the value flashes, indicating that that digit can be changed. Press the **ARROW** button repeatedly to advance the flashing digit. If you pass the desired value, continue pressing the **ARROW** button. The digit will roll over to 0 after reaching the number 9.

After each digit has been set, press **MODE** to move to the next digit.

When entering the Analog Output Offset Setting (0-5), the entry is made as a single entity, not digit-by-digit, and the entry does not flash.

The unit passes through all programming modes regardless of whether each option is installed.

1. Enter the **HI** Set Point for alarm LED and relay.
2. Enter the **LO** Set Point for alarm LED and relay.
3. Enter the Relay Deadband.
4. Choose the Analog Output Offset Setting.

About the Alarm Set Points

The MPM-2 is equipped with two front-panel LED alarm indicators with a user-programmable set point for each. These set points control the optional alarms relays as well as the LEDs.

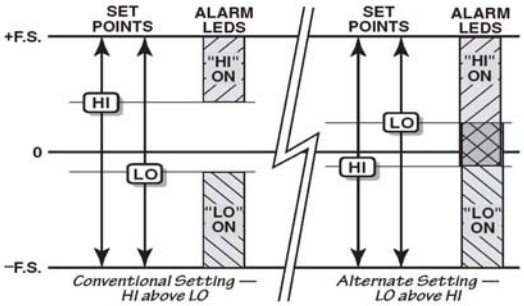

Figure 11 – Setpoints

The factory default setting for the **HI** set point is the positive full-scale value (+1.999 for 2" H_20 models). The factory default setting for the **LO** set point is the negative full-scale value (–1.999 for 2" H_20 models). The user can program the **HI** and **LO** set points independently to any value within the available range.

If either or both set points will not be used, it is suggested that they be kept at the factory settings at the outer boundaries of the usable range.

When the measured pressure equals or exceeds the **HI** set point value, the **HI** LED alarm indicator illuminates. The LED remains illuminated until the pressure falls below the programmed **HI** set point value, less any deadband that has been programmed.

When the measured pressure equals or is more negative than the **LO** set point value, the **LO** LED alarm indicator illuminates. The LED remains illuminated until the measured pressure rises above the programmed **LO** set point value, plus any deadband that has been programmed.

Note that the **LO** set point can be programmed higher than the **HI** setpoint, for applications where it is desired to illuminate both LEDs when the pressure is within a desired range.

Programming the Alarm Set Points

After the first press of **MODE**, the **HI** LED flashes, indicating the **HI** set point is being entered. Press the **ARROW** key repeatedly to display the desired digit. Next, press **MODE** to move towards the most significant digit, and repeatedly press the **ARROW** key to advance the digit's value. Continue for the remaining digits. The sign of the set point (+ or –) is selected last.

BAKER
Environments For Science™
P. O. Drawer E / 161 Gatehouse Road / Sanford, Maine 04073 / USA
800-992-2537 / 207-324-8773 / Fax: 207-324-3869 / bakerco@bakerco.com / bakerco.com

Warning: *The left-most digit is a "half digit" (excluding the 5" and 5 kPa models). This means it can only display values of a blank ("0") or "1." You will always see a flashing "1" when you move to this digit, to identify this as the active digit. Press the arrow key to stop the flashing and display either a blank ("0") or "1," and then press it again if necessary to select the desired value.*

After the **HI** set point has been programmed, press **MODE** to enter the **LO** set point. The **LO** alarm LED flashes, and you can repeat the above process to program the **LO** set point.

Note: To set the **LO** *set point without changing the* **HI** *set point, you must step through all the* **HI** *set point digits by pressing* **MODE** *until you get to the* **LO** *set point digits.*

About the Relay Deadband

The optional relay board contains two relays—one controlled by the **HI** set point and one by the **LO** set point. Programming the set points for the LEDs and relays is described in the previous section.

The deadband selection is provided to keep the relays from chattering when the pressure varies near the set point. (See Figure 12). For 2" models, the deadband can be programmed to values from .000" to .999" H_20 with a factory default of .100" H_20.

Warning: *It is possible to program a deadband of zero width. If relays are connected to the MPM-2, the deadband should be chosen to keep the relays from chattering when the pressure fluctuates near the set points.*

Figure 13 illustrates specific examples of the switching points of relays with a deadband in place. In particular, the possibilities of system latchup when the pressure cannot be made to pass

through the deadband threshold are shown. It is necessary to assure that set point and deadband settings will not be subject to these conditions.

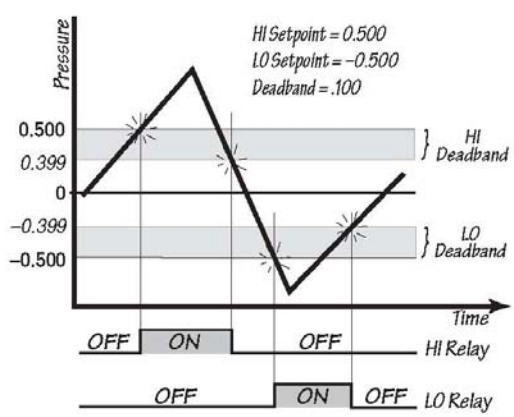

Figure 12 – The Deadbands

P. O. Drawer E / 161 Gatehouse Road / Sanford, Maine 04073 / USA
800-992-2537 / 207-324-8773 / Fax: 207-324-3869 / bakerco@bakerco.com / bakerco.com

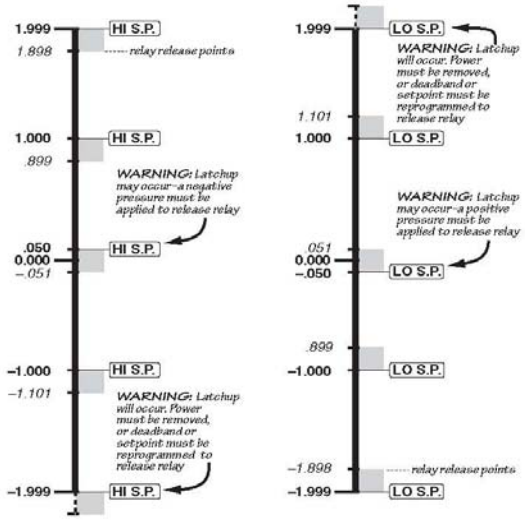

Five examples of HI setpoints with deadband of .100 showing relay release points and possible latchup conditions

Five examples of LO setpoints with deadband of .100 showing relay release points and possible latchup conditions

Figure 13 – Examples of Deadband settings

BAKER
Environments For Science™
P. O. Drawer E / 161 Gatehouse Road / Sanford, Maine 04073 / USA
800-992-2537 / 207-324-8773 / Fax: 207-324-3869 / bakerco@bakerco.com / bakerco.com

Programming the Relay Deadband

To display the deadband, press **MODE** once after setting the **LO** set point polarity in the previous step. Both alarm LEDs flash. The three digits displayed are the deadband width, in the same units used for data display. The factory default deadband value is .100.

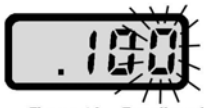

Figure 14 – Deadband

Press the **ARROW** and **MODE** keys as described earlier to step the deadband to a value from .000 to *.999*.

About the Analog Outputs

The optional analog outputs can be programmed to any of six offset settings. Settings 0, 1 and 2 provide the full range of analog output values (0–5VDC and 0–20mA), with a choice of offsets. Settings 3, 4 and 5 provide an output current range of 4–20mA, with the same offset choices. Available analog output offset settings and output ranges are shown below.

Setting number	Setting name	Input range for linear output	Voltage output range	Current output range	Analog output at zero pressure
0	1/2 offset	–F.S. to +F.S.	0–5V	0–20mA	2.5V / 10mA
1	no offset	0 to +F.S.	0–5V	0–20mA	0V / 0mA
2	1/4 offset	< 0 to +F.S.	0–5V	0–20mA	1.25V / 5mA
3	1/2 offset	–F.S. to +F.S.	N/A	4–20mA	12mA
4	no offset	0 to +F.S.	N/A	4–20mA	4mA
5	1/4 offset	< 0 to +F.S.	N/A	4–20mA	8mA

Note that Setting "0" (½ offset) is the factory default setting.

Figure 16 on page 20 illustrates the available settings.

Note: Even though the Analog Output may be programmed to clip at its minimum value when the input pressure goes negative, the MPM will still ***display*** *readings over the full input range that is valid for the unit.*

Programming the Analog Outputs

Press **MODE** once after the previous step to display the analog output offset setting. The digit "1" on the left indicates the unit is in "Analog Setting" mode. The digit on the right indicates the selected setting (0–5). Press the **ARROW** key to change the setting.

Figure 15 – Analog output offset setting

The digit being entered rolls over from 5 to 0, so that if you pass the desired setting, continue pressing until the desired number is displayed.

Returning to normal operation

Press **MODE** a final time to end programming and return to the normal pressure display.

BAKER
Environments For Science™
P. O. Drawer E / 161 Gatehouse Road / Sanford, Maine 04073 / USA
800-992-2537 / 207-324-8773 / Fax: 207-324-3869 / bakerco@bakerco.com / bakerco.com

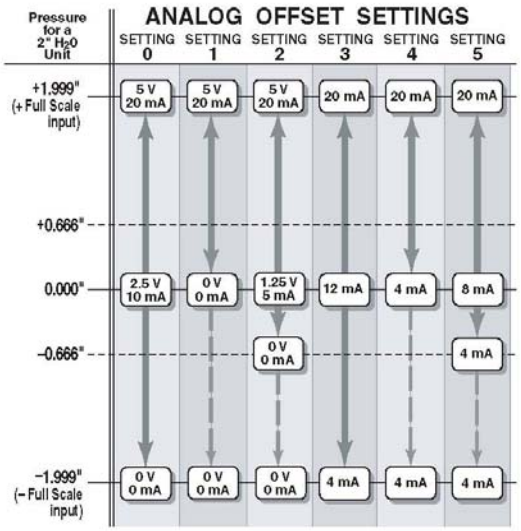

Figure 16 – Analog output offset settings

BAKER
Environments For Science™
P. O. Drawer E / 161 Gatehouse Road / Sanford, Maine 04073 / USA
800-992-2537 / 207-324-8773 / Fax: 207-324-3869 / bakerco@bakerco.com / bakerco.com

Factory default settings

The factory default settings for MPM-2 programming parameters are listed below:

High Set Point: + Full Scale (1.999" for 2" H_2O models)

Low Set Point: – Full Scale (–1.999 for 2" H_2O models)

Deadband: .100

Analog output offset setting: ½ Offset

To restore the factory defaults, remove the unit's power, press and hold **MODE**, reapply power, and release **MODE**.

LED / DISPLAY conditions

Normal operation states: LEDs not flashing

● OFF	● OFF	No Alarms
○ ON	● OFF	HI Alarm
● OFF	○ ON	LO Alarm
○ ON	○ ON	Both Alarms

Programming states: LEDs flashing (except 4th state–all off)

☼ FLASH	● OFF	Enter HI Set Point
● OFF	☼ FLASH	Enter LO Set Point
☼ FLASH	☼ FLASH	Enter Deadband
● OFF	● OFF	Enter Analog Offset

If all numeric digits flash, the input pressure exceeds the measurement range of the unit.

BAKER
Environments For Science™
P. O. Drawer E / 161 Gatehouse Road / Sanford, Maine 04073 / USA
800-992-2537 / 207-324-8773 / Fax: 207-324-3869 / bakerco@bakerco.com / bakerco.com

Appendix A – Specifications

Physical

Configuration: Panel Mount (up to ¼" thick)
Dimensions: ⅛ DIN, 1.9" deep (at base of pressure fittings)
Panel Cutout Dimensions: 3.62" wide x 1.77" high
Enclosure: NEMA 4 (Front Panel Only) with gasket accessory
Housing Material: ABS Plastic
Panel Retention Clip Material: Polycarbonate
Operating Temperature Range: 0 to 55°C
Storage Temperature Range: –20 to 70°C
Relative Humidity: 10% to 90%

Measurement capability

Optional Measurement Ranges: ± 2" H_2O
± 5" H_2O
± 10" H_2O
± 20" H_2O
± 2 kPa
± 5 kPa
Proof Pressure: 3 × Range
Relative Accuracy: ± 0.5% of range
Span Tempco: ± 0.02% FS/°C
Zero Tempco: ± 0.05% FS/°C
Pressure Line Polarity: Bi-directional
Warm-up Time: 3 minutes to rated accuracy

Display: 3-½ digit LCD display
User Adjustments:
Three push-buttons: Zero, Mode Selection, Up-Arrow

Power Requirements

Voltage:
5–36 VDC for models with no analog output and no relays
11–32 VDC for models with analog output option and/or relay option
Power Consumption:
30 mA for models without options
70 mA for models with relays ***or*** Analog Output
110 mA for models with relays ***and*** Analog Output

Connections

Electrical:
Power: screw terminal, 14–26 AWG
Optional outputs: screw terminal, 16–28 AWG
Analog output (0/4–20 mA and 0–5 VDC) isolated
Dual Relay Contacts, 2 Amp, SPDT
(7 amp optional)

Pressure Lines: ⅛ NPT (Female)

BAKER
Environments For Science™
P. O. Drawer E / 161 Gatehouse Road / Sanford, Maine 04073 / USA
800-992-2537 / 207-324-8773 / Fax: 207-324-3869 / bakerco@bakerco.com / bakerco.com

Appendix B – Repairs and returns

Instrument Return Procedure

All Modus Instruments equipment is fully tested and calibrated prior to shipment. Should a problem with the operation of the equipment arise, follow the procedure below:

1. Contact the factory to discuss the problem. In countries other than the U.S., the local agent can also be contacted. Sometimes a problem can be resolved by a change in operating procedure or an adjustment to the equipment.
2. If the equipment must be returned to the factory, before doing so, obtain a return authorization number from Modus Instruments, and reference the number on the return shipping papers. **A written description of the problem should also be included with the instrument.**
3. If equipment is covered by Modus Instruments' Warranty Policy, the unit will be repaired at no charge and returned to the customer.
4. If equipment is not covered under the terms of the warranty, Modus personnel will contact the customer with a repair estimate.
5. After receiving a Return Authorization Number, the equipment must be returned **freight prepaid**.
6. Modus Instruments reserves the right to apply a minimum service charge in cases where an instrument is returned for repairs or recalibration, but does not require service.

BAKER
Environments For Science™
P. O. Drawer E / 161 Gatehouse Road / Sanford, Maine 04073 / USA
800-992-2537 / 207-324-8773 / Fax: 207-324-3869 / bakerco@bakerco.com / bakerco.com

Returning equipment without a Return Authorization number and Purchase Order significantly delays turnaround time and incurs additional costs. To expedite repairs and reduce costs, please follow the above instructions.

Note: Modus Instruments guarantees NIST traceability and operation within stated specifications. However, claims regarding accuracy or traceability will be covered under warranty only when verified at Modus Instruments, or by a fully independent testing laboratory. Examples of independent labs are: National Institute of Standards and Technology in the U.S., and the National Physical Laboratory (NPL) in the U.K.

Repaired Equipment

All repairs are warranted for 90 days. Only the repairs and components replaced as part of these repairs are covered by this warranty. Other repairs or defective parts are covered by the original warranty, if applicable.

The aforementioned provisions do not extend the original warranty of any article which has been either repaired or replaced by the Seller.

Damaged Shipments

In case of shipping damage, it is the Buyer's responsibility to file a claim. The Buyer should inspect the shipping container upon receipt and note any evidence of damage on the freight waybill. If concealed damage is found after opening the container, the customer should file a claim with the carrier at once. The customer must retain the shipping container and all materials during the lifetime of the warranty.